SFR9300X

Category	Reduced height 90 cm
Product Family	Oven
Power supply	Electric
Heat source	ELECTRICITY
Cooking method	Thermo-ventilated
Cleaning system	Vapor Clean
EAN code	8017709258214



Aesthetics

Aesthetic	Classica	**Serigraphy type**	Symbols
Colour	Stainless Steel	**Door**	With 2 horizontal strips
Design	Flat	**Handle**	Classic
Material	Stainless steel	**Handle Colour**	Inox
Type of steel	Brushed	**Logo**	Embossed
Glass Type	Eclipse	**Control knobs**	Classic
Serigraphy colour	Black	**Controls colour**	Steel effect

Controls

Display name	DigiScreen	**Control setting**	Knobs & touch buttons
Display technology	LED	**No. of controls**	2

Programs / Functions main oven

No. of cooking functions 8

Traditional cooking functions

- Static
- Fan assisted
- Circulaire
- Eco
- Large grill
- Fan grill (large)
- Base
- Circulaire + bottom

Cleaning functions

Vapor Clean

Options

Time-setting options	Delay start and automatic end cooking	**Minute minder**	Yes

Technical Features



Capacity (Lt)	85 l	**Circular heating element 2 - Power**	1550 W
Minimum Temperature	30 °C	**Heating suspended when door is opened**	Yes
Maximum temperature	260 °C	**Door opening type**	Standard opening
No. of shelves	4	**Door**	Cool
N. of fans	2	**Removable door**	Yes
No. of lights	2	**Full glass inner door**	Yes
Light type	Halogen	**Removable inner door**	Yes
User-replaceable light	Yes	**Total no. of door glasses**	3
Light Power	40 W	**Cooling system**	Tangential
Light when door is opened	Yes	**Cooling duct**	Single
Lower heating element power	1700 W	**Speed Reduction Cooling System**	Yes
Upper heating element - Power	1200 W	**Usable cavity space dimensions (HxWxD)**	283x724x418 mm
Grill element - power	1700 W	**Temperature control**	Electronic
Large grill - Power	2900 W	**Cavity material**	Ever clean Enamel
Circular heating element - Power	1550 W		

Performance / Energy Label



Energy efficiency class	A+	**Energy consumption in forced air convection**	2,66 MJ
Net volume of the cavity	85 l	**Energy consumption per cycle in fan-forced convection**	0,74 kWh
Energy consumption per cycle in conventional mode	1,15 kWh	**Number of cavities**	1
Energy consumption in conventional mode	4,14 MJ	**Energy efficiency index**	81,3 %

Accessories included

Rack with back stop	1	**Insert gird**	1

Enamelled deep tray (40mm)	1

Electrical Connection

Voltage	220-240 V	**Nominal power**	3100 W
Plug	Not present	**Frequency (Hz)**	50/60 Hz
Current	14 A	**Power supply cable length**	150 cm

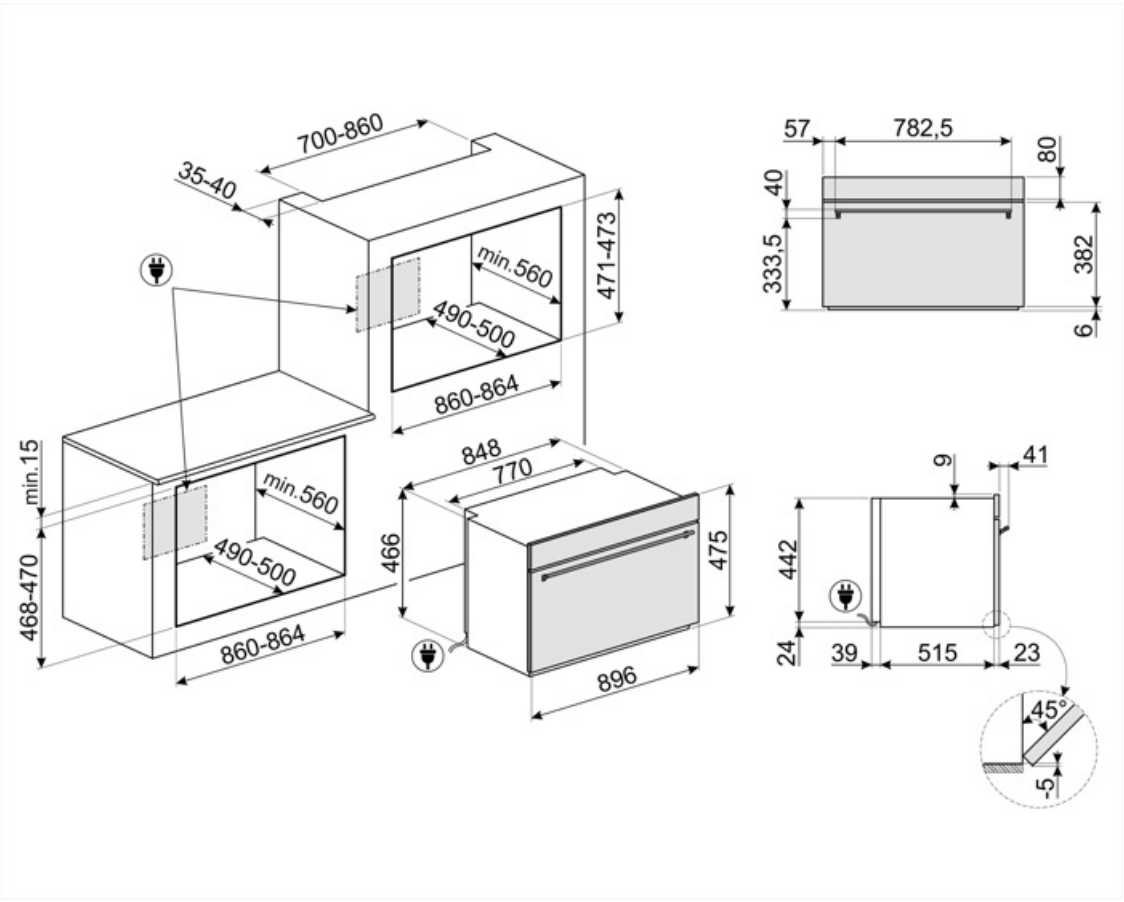

Compatible Accessories



BNP608T

Teflon-coated tray, 8 mm depth, to be placed on the grid



GTT

Totally extractable telescopic guides (1 level), suitable for traditional ovens. Made in stainless steel, they guarantee stability and facilitate the smooth extraction of the trays.



GTP

Partially extractable telescopic guides (1 level), suitable for traditional ovens. Made in stainless steel, they guarantee stability and facilitate the smooth extraction of the trays.

Symbols glossary



A+: Energy efficiency class A+ helps to save up to 10% energy compared to class A. Maximum performance with minimum consumption is guaranteed.



4.3 inch display with LED technology, usability with knobs + 3 touch keys



Electric



Fresh Touch: Most of Smeg ovens have a "cool door." Thanks to the combination of tangential cooling and internal heat-reflecting glasses, the temperature on the outer surface of the door is maintained below 50° C. In addition to providing safety, this system protects the sides of the furniture from overheating by the oven.



Static: Traditional cooking suitable for the preparation of one dish at a time. The fan is not active and the heat comes from below and from above at the same time. Static cooking is slower and more delicate, ideal in order to get well cooked and dry dishes even inside. Ideal for cooking all types of roasts, fatty meats, bread, filled cakes.



Circulaire with lower element: The addition of the lower element adds extra heat at the base for food which requires extra cooking.



ECO: low energy consumption cooking: this function is particularly suitable for cooking on a single shelf with low energy consumption. It is recommended for all types of food except those that can generate a lot of moisture (for example vegetables). To achieve maximum energy savings and reduce time, it is recommended to put the food in the oven without preheating the cooking compartment.



Air cooling system: to ensure a safe surface temperatures.



Triple glazed doors: Number of glazed doors.



Ever Clean Enamel: Ever Clean enamel is applied electrostatically, corner to corner and edge to edge to prevent cracking or cracks over time. It is a particular pyrolytic enamel, resistant to acids which, in addition to being pleasantly bright, promotes greater cleaning of the oven walls, thanks to its lower porosity. It is baked at over 850 °C and slowly polymerized at a scientifically determined rate to ensure uniform depth and strength. Ever Clean enamel creates an impeccable finish both on the inside of the oven and on the trays, making the surfaces of the oven incredibly easy to maintain over time as it reduces the adhesion of fat during cooking.



Fan assisted: Intense and homogeneous traditional cooking, also suitable for complex recipes. The fan is active and the heat comes from below and from above at the same time. Ventilated cooking ensures a faster and more homogeneous result, leaving fragrant foods outside and moister inside. Ideal for baked pasta, biscuits, roasts and cobblers.



Base: the heat comes only from the bottom of the cavity. The fan is not active. Ideal for sweet and savory pies, cobblers and pizzas. Designed to complete cooking and make food more crunchy. This symbol in gas ovens indicates the gas burner.



Circulaire: it is the perfect function for cooking all types of dishes in a more delicate way. The heat comes from the back of the oven and is distributed quickly and evenly. The fan is active. It is also ideal for cooking on multiple levels without mixing smells and flavors.



Grill: Very intense heat coming only from above from a double heating element. The fan is not active. Provides excellent grilling and gratinating results. Used at the end of cooking, it gives a uniform browning to dishes.

Fan grill: very intense heat coming only from above from a double heating element. The fan is active. It allows the optimal grilling of thickest meats. Ideal for large cuts of meat.

All glass inner door: All glass inner door, a single flat surface which is simple to keep clean.

Side lights: Two opposing side lights increase visibility inside the oven.

Electronic control: Allows you to maintain temperature inside the oven with the precision 2-3 ° C. This enables to cook meals that are very sensitive to temperature changes, such as cakes, souffles, puddings.

The capacity indicates the amount of usable space in the oven cavity in litres.

Compact appliances with a height of 48 cm. Perfect solution to meet the functional requirements of kitchen sets of small height. Available in several types and in different styles.

The inner door glass: can be removed with a few quick movements for cleaning.

The oven cavity has 4 different cooking levels.

Vapor Clean: a simple cleaning function using steam to loosen deposits in the oven cavity.