SHU971X

Product family	Hood
Hood Type	Integrated hood
Design	Ceiling
Extraction	Recirculation
Material	Stainless steel
Type of steel	Brushed
EAN code	8017709336516
Aesthetic	Universale
Colour	Stainless steel
Finishing	Satin



Controls

Control setting	Buttons

Program / Functions

No. of speeds	3
Intensive speed	BOOST

Technical Features

No. of lights	2	**No. of filters**	3
Light type	LED	**Anti-grease filters**	Stainless steel
Light Power	1.1 W	**Vent outlet**	150 mm
Light color temperature scale (K)	4000 K	**Minimum distance from GAS hob**	650 mm
Free outlet maximum capacity	780 m³/h	**Minimum distance from ELECTRIC hob**	600 mm
Motor power	250 W		

	Extraction rate IEC 61591 [m³/h]	Noise level IEC 60704-2-13 [dBA]
Speed 1	300	46
Speed 2	450	55
Speed 3	630	62

Intensive speed	750	66

Accessories Included

Tube reduction	Yes

Electrical Connection

Electrical connection rating	252 W	**Frequency (Hz)**	50-60 Hz
Current	10 A	**Power supply cable length**	1500 mm
Voltage	220-240 V	**Plug**	(I) Australia

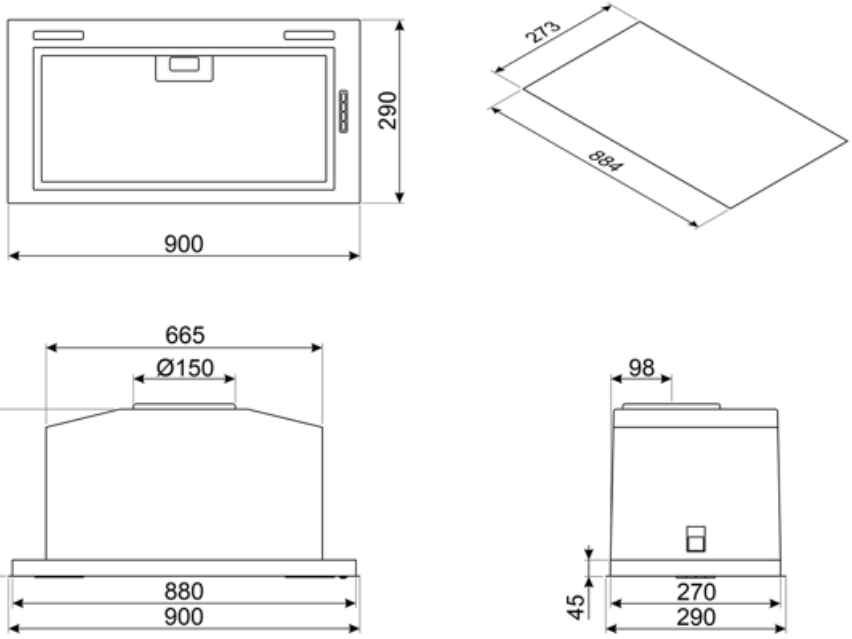

Compatible Accessories



KITFC152

Charcoal filters Round Kit 2 pieces

Symbols glossary



Filters: Model has filters to help remove grease from the steam emanating from the pans during cooking.



Intensive/turbo setting: when extra fast extraction is required.



Lights: All cooker hoods feature lights to illuminate the cooking area or add to the ambience of the kitchen.