# SIA1963DG

| | |
|---|---|
| **Product Family** | Hob |
| **Built-in type** | Ultra-low profile or Fully Flushed |
| **Dimensions** | 90 cm |
| **Power supply** | Electric |
| **Type** | Induction |
| **EAN code** | 8017709328016 |



## Aesthetics

| | |
|---|---|
| **Aesthetic** | Linea |
| **Colour** | Neptune Grey |
| **Finishing** | Glass |
| **Material** | Glass |
| **Glass type** | 'Glassy' ceramic |
| **Glass edge** | Straight edge |
| **Type of control setting** | Vivo Screen Max |
| **Slider** | Yes |
| **LED colours** | TFT |
| **Control knob position** | Front |
| **Logo** | Silk screen |
| **Serigraphy colour** | Black |
| **Alternative colours available** | Black |

## Program / Functions

| | |
|---|---|
| **No. of induction cook zones** | 6 |
| **Time-setting options** | Automatic switch-off |
| **No. of cooking zones with booster** | 6 |
| **No. of Flexible zones** | 3 |
| **Main on/off switch** | Yes |
| **Power levels** | 17 |

## Options

| | | | |
|---|---|---|---|
| **Multizone Option** | Yes | **Minute minder** | 1 |
| **Flexible Zone Type** | AreaZone | **End of cooking alarm** | Yes |
| **Worktop Cut-Out** | 500-916 mm | **Residual time indicator** | Yes |
| **Follow Pot** | Yes | **Limited Power Consumption Mode** | Si Advance |
| **Auto-boiling Function** | Yes | | |
| **Simmering Function** | Yes | **Limited Power Consumption Mode in W** | 2400 a 11100 - step 100 W |
| **Keep warm automatic function** | Yes | **Showroom Demo Option** | Yes |
| **Melting/Low temperature cooking function** | Yes | **Control Lock / Child Safety** | Yes |
| | | **Bridge option** | Yes |
| **End cooking timer** | 6 | **Quick start** | Yes |
| **Pause option** | Yes | **Rapid level selection** | Yes |

## Technical Features

Central - Induction - Multizone - 2.40 kW - Booster 3.70 kW - 84.0x40.0 cm

| | | | |
|---|---|---|---|
| **Automatic setting according to pan dimension** | Yes | **Automatic switch off when overflow** | Yes |
| | | **Residual heat indicator** | Yes |
| **pan detection** | Yes, min. 10 cm | **Protection against accidental start up** | Yes |
| **Permanent Automatic Pot Detection with indication of the relative control** | Yes | | |
| **Automatic switch off when overheat** | Yes | | |

## Electrical Connection

| | | | |
|---|---|---|---|
| **Electrical connection rating (W)** | 11100 W | **Type of electric cable supplied** | Yes, Single and Double phase |
| **Current** | 49 A | **Frequency (Hz)** | 50/60 Hz |
| **Voltage (V)** | 220-240 V | **Power supply cable length** | 120 cm |
| **Voltage 2 (V)** | 380-415 V | | |
| **Type of electric cable installed** | Yes, Three-phase | **Terminal box** | 5 poles |
| | | **Plug** | Not present |
| **Additional connection modalities** | Yes, Single and Double phase | | |

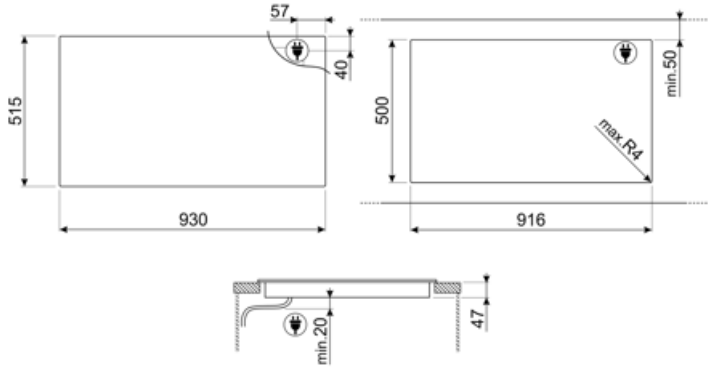
57
40
515
930
500
min.50
max.R4
916
min.20
47

## Compatible Accessories



**GRILLPLATE**

Universal griddle for induction, gas, ceramic and electric hobs. Non-stick surface ideal for cooking meat, cheese and vegetables. Dimensions: 410 x 240 mm.



**TPKPLATE**

Universal plate for induction, gas, ceramic and electric hobs. Non-stick surface ideal for cooking fish, eggs and vegetables. Dimensions: 410 X 240 mm.



**SCRP**

Non-scratch hob scraper - suitable for induction and ceramic hobs

## Alternative products



**SIA1963D**

**Colour:** Black

## Symbols glossary



Permanent auto pot detection



Automatic Boiling function: a sensor confirms once the boiling point has been reached and then an acoustic alert signals that the ingredients can be added, saving time and energy.



Power booster: option allows the zone to work at full power when very intense cooking is necessary.



Child lock: some models are fitted with a device to lock the programme/cycle so it cannot be accidentally changed.



The slider control panel allows you to adjust the power simply by passing your finger across the touch device.



This function allows you to keep cooked food warm without burner it




Overheat protection: The safety system that automatically turns off the hob in case of overheating of the control unit.



Induction: The work of these hobs is based on the principle of electromagnetic induction. The heat is generated directly in the bottom of the pan during its contact with the hob.



Melting function, suitable for slowly melting delicate foods such as chocolate or butter.



Overfill protection: The special overfill protection shuts down the stove in the presence of overflow of liquids.



All cooking zones can be reduced to the minimum power level, so the hob can be left unattended for a short period without food overcooking or burning. Then just press again this function, the previously set power levels can be reactivated.




Quick selection, with one touch cooking begins at the highest level, then automatically reduces after time. Ideal for dishes that require quick boiling and then continued cooking without constant control (eg beef broth).



Quick Start function: the chosen temperature is reached faster. The heating element works at maximum power until the right temperature is reached.



Indication of residual heat: After the glass ceramic hob is switched off the residual heat indicator shows which of the heating zones still remains hot. When the temperature drops below 60 ° C, the indicator goes out.



Simmering function: ideal for long-cooking recipes, preventing food from boiling over or sticking to the pan.



Time elapsed: shows how long the cooking zone has been in use.



Timer: All ceramic hobs have a timer which automatically ends cooking after a preset time.



TWIN_ZONE_72dpi




Possibility to set the maximum power absorbion of the hob.



Possibility to freely move the pot everywhere without turn off the initial settings chosen.




7 inches TFT touch, high resolution display, true colours




Elegant silver or black glass with under glass serigraphy which allows smoothness, briliance and no noise to the surface