# SIA1963DS

| | |
|---|---|
| **Product Family** | Hob |
| **Built-in** | Ultra-low profile or Fully Flushed |
| **Dimensions** | 90 cm |
| **Power supply** | Electric |
| **Type** | Induction |
| **EAN code** | 8017709304041 |



## Aesthetics

| | |
|---|---|
| **Aesthetics** | Linea |
| **Colour** | Silver |
| **Finishing** | Glass |
| **Material** | Glass |
| **Glass Type** | Ceramic glass |
| **Glass edge** | Straight edge |
| **Type of control setting** | Vivo Screen Max |
| **Slider** | Yes |
| **Slider** | TFT |
| **Control knobs position** | Front |
| **Logo** | Silk screen |
| **Serigraphy colour** | Grey |
| **Alternative colours available** | Black |

## Program / Functions

| | |
|---|---|
| **No. of induction cook zones** | 6 |
| **Time-setting options** | Automatic switch-off |
| **No. of cooking zones with booster** | 6 |
| **Main on/off switch** | Yes |
| **Power levels** | 17 |

## Options

| | |
|---|---|
| **Multizone Option** | Yes |
| **Flexible Zone Type** | AreaZone |
| **Standard cut out** | 500-916 mm |
| **Auto-boiling Function** | Yes |
| **Simmering Function** | Yes |
| **Keep warm automatic function** | Yes |
| **Melting/Low temperature cooking function** | Yes |
| **End cooking timer** | 6 |
| **Pause option** | Yes |
| **Minute minder** | 1 |
| **End of cooking acoustic alarm** | Yes |
| **Residual time indicator** | Yes |
| **Limited Power Consumption Mode** | Yes advance |
| **Limited Power Consumption Mode in W** | 2400 a 11100 - step 100 W |
| **Show Room Demo Option** | Yes |
| **Control Lock / Child Safety** | Yes |
| **Bridge option** | Yes |
| **Quick start** | Yes |
| **Rapid level selection** | Yes |

## Technical Features

Central - Induction - Multizone - 2.40 kW - Booster 3.70 kW - 84.0x40.0 cm

| | |
|---|---|
| **Automatic setting according to pan dimension** | Yes |
| **Automatic pan detection** | Yes, min 10 cm |
| **Permanent Automatic Pot Detection with indication of the relative control** | Yes |
| **Automatic switch off when overheat** | Yes |
| **Automatic switch off when overflow** | Yes |
| **Residual heat indicator** | Yes |
| **Protection against accidental start up** | Yes |

## Electrical Connection

| | |
|---|---|
| **Nominal power (W)** | 11100 W |
| **Current** | 49 A |
| **Voltage (V)** | 220-240 V |
| **Voltage 2 (V)** | 380-415 V |
| **Type of electric cable** | Three-phase |
| **Type of electric cable** | Single and Double phase |
| **Type of electric cable supplied** | Yes, Single and Double phase |
| **Frequency (Hz)** | 50/60 Hz |
| **Power supply cable length** | 120 cm |
| **Terminal Box** | 5 poles |
| **Plug** | No |

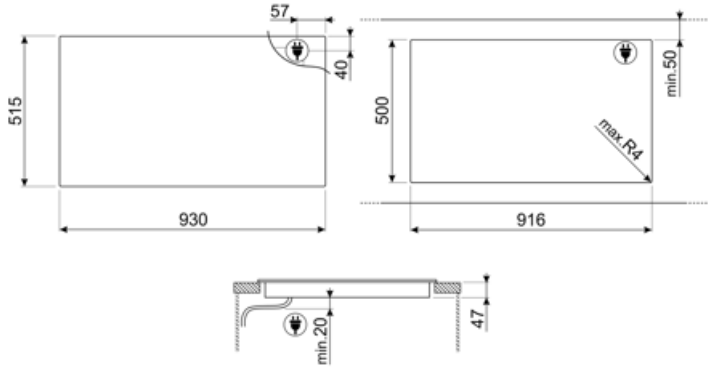
57
40
515
930
500
min.50
max.R4
916
min.20
47

## Compatible Accessories



**GRILLPLATE**

Universal griddle for induction, gas, ceramic and electric hobs. Non-stick surface ideal for cooking meat, cheese and vegetables. Dimensions: 410 x 240 mm.



**TPKPLATE**

Universal plate for induction, gas, ceramic and electric hobs. Non-stick surface ideal for cooking fish, eggs and vegetables. Dimensions: 410 X 240 mm.



**SCRP**

Induction and ceramic hobs and teppanyaki scraper

## Symbols glossary



Automatic Boiling function: a sensor confirms once the boiling point has been reached and then an acoustic alert signals that the ingredients can be added, saving time and energy.



Child lock: some models are fitted with a device to lock the programme/cycle so it cannot be accidentally changed.



Keep warm function: Keep warm function keeps the cooked food heated. In this mode the heating zone operates at a minimum capacity for 120 minutes and then turns off automatically.



Induction: The work of these hobs is based on the principle of electromagnetic induction. The heat is generated directly in the bottom of the pan during its contact with the hob.



Overfill protection: The special overfill protection shuts down the stove in the presence of overflow of liquids.




Quick selection, with one touch cooking begins at the highest level, then automatically reduces after time. Ideal for dishes that require quick boiling and then continued cooking without constant control (eg beef broth).



Indication of residual heat: After the glass ceramic hob is switched off the residual heat indicator shows which of the heating zones still remains hot. When the temperature drops below 60 ° C, the indicator goes out.



Time elapsed: shows how long the cooking zone has been in use.



TWIN_ZONE_72dpi




Possibility to set the maximum power absorbion of the hob




Elegant silver or black glass with under glass serigraphy which allows smoothness, briliance and no noise to the surface



Power booster: option allows the zone to work at full power when very intense cooking is necessary.



The slider control panel allows you to adjust the power simply by passing your finger across the touch device.




Overheat protection: The safety system that automatically turns off the hob in case of overheating of the control unit.



Melting function, suitable for slowly melting delicate foods such as chocolate or butter.



PAUSE_72dpi



Quick Start function: the chosen temperature is reached faster. The heating element works at maximum power until the right temperature is reached.



Simmering function: ideal for long-cooking recipes, preventing food from boiling over or sticking to the pan.



Timer: All ceramic hobs have a timer which automatically ends cooking after a preset time.



Permanent auto pot detection




7 inches TFT touch, high resolution display, true colours