SO4104M2PG

Category	45 cm
Product Family	Oven
Power supply	Electric
Heat source	ELECTRICITY
Cooking method	Combi Microwave
Galileo platform	Speedwave
Cleaning system	Vapor Clean
EAN code	8017709326814

Aesthetics

Aesthetic	Linea	**Serigraphy colour**	Black
Colour	Neptune Grey	**Serigraphy type**	Symbols
Finishing	Matt	**Door**	Full glass
Design	Flat	**Handle**	Linea minimal
Material	Glass	**Handle Colour**	Satin metal and black
Glass Type	Clear	**Logo**	Silk screen

Controls

Display name	VivoScreen	**No. of display languages**	20
Display technology	TFT	**Display languages**	Italiano, English (UK), Français (FR), Français (CA), Nederlands, Español (ES), Español (MX), Português (PT), Svenska, Русский, Deutsch (DE), Dansk, Norsk, Polski, English (AU), Suomi, Ukrainian, Kazakh, Afrikaans (ZA), Zulu (ZA)
Control setting	Full touch		

Programs / Functions main oven

No. of cooking functions	15
Automatic programmes	150
Customisable recipes	10

Traditional cooking functions

- Static
- Fan assisted
- Circulaire
- Turbo
- Eco
- Large grill
- Fan grill (large)
- Base
- Circulaire + bottom
- Pizza

Microwave functions

- Microwave
- Fan assisted
- Circulaire
- Microwave + grill
- Microwavews + Circulaire + bottom
- Warming and re-generation

Other functions

- Defrost by time
- Defrost by weight
- Leavening
- Stone cooking
- BBQ
- Air-Fry
- Keep warm
- Plate rack/warmer
- Sabbath

Cleaning functions

- Vapor Clean

Options

Time-setting options	Delay start and automatic end cooking
Minute minder	Yes
Timer	3
Controls Lock / Child Safety	Yes
Other options	Keep warm, Eco light, Language setting, Digital clock display, Brightness, ECO-logic, Tones, Tones volume
Cooking with probe thermometer	Yes
Multi-step cooking	Yes, up to 2 steps
Smart cooking	Yes
SameTime	Yes
DeltaT cooking	Yes
Showroom demo option	Yes
Demo-tutorial mode	Yes
Touch guide	Yes
Chronology	Yes, the last 10 functions utilized
Rapid pre-heating	Yes
Instant GO	Yes

Technical Features

smeg

Capacity (Lt)	<50 l
Minimum Temperature	25 °C
Maximum temperature	250 °C
No. of shelves	2
No. of lights	1
Light type	LED
Light Power	3 W
Light when door is opened	Yes
Lower heating element power	1200 W
Upper heating element - Power	1000 W
Grill element - power	1700 W
Large grill - Power	2700 W
Circular heating element - Power	1400 W
Heating suspended when door is opened	Yes
Door opening type	Standard opening
Door	Temperate door
Total no. of door glasses	3
Microwave stops when door is opened	Yes
Soft Close hinges	Yes
Soft Open	Yes
Inverter	Yes
Stirrer	Yes
Chimney	Double
Cooling system	Tangential
Cooling duct	Single
Usable cavity space dimensions (HxWxD)	214x462x397 mm
Temperature control	Electronic
Cavity material	Ever clean Enamel
Microwave screen protection	Yes

Performance / Energy Label

Net volume of the cavity	40 l
Number of cavities	1
Microwave effective power	900 W

Accessories included

Rack with back stop (concave)	1
Insert gird	1
Glass tray	1
Telescopic Guide rails, total Extraction	1
Temperature probe	Yes, multipoint

Electrical Connection

Voltage	220-240 V
Plug	Not present
Current	13 A
Nominal power	3000 W
Frequency (Hz)	50/60 Hz
Power supply cable length	150 cm

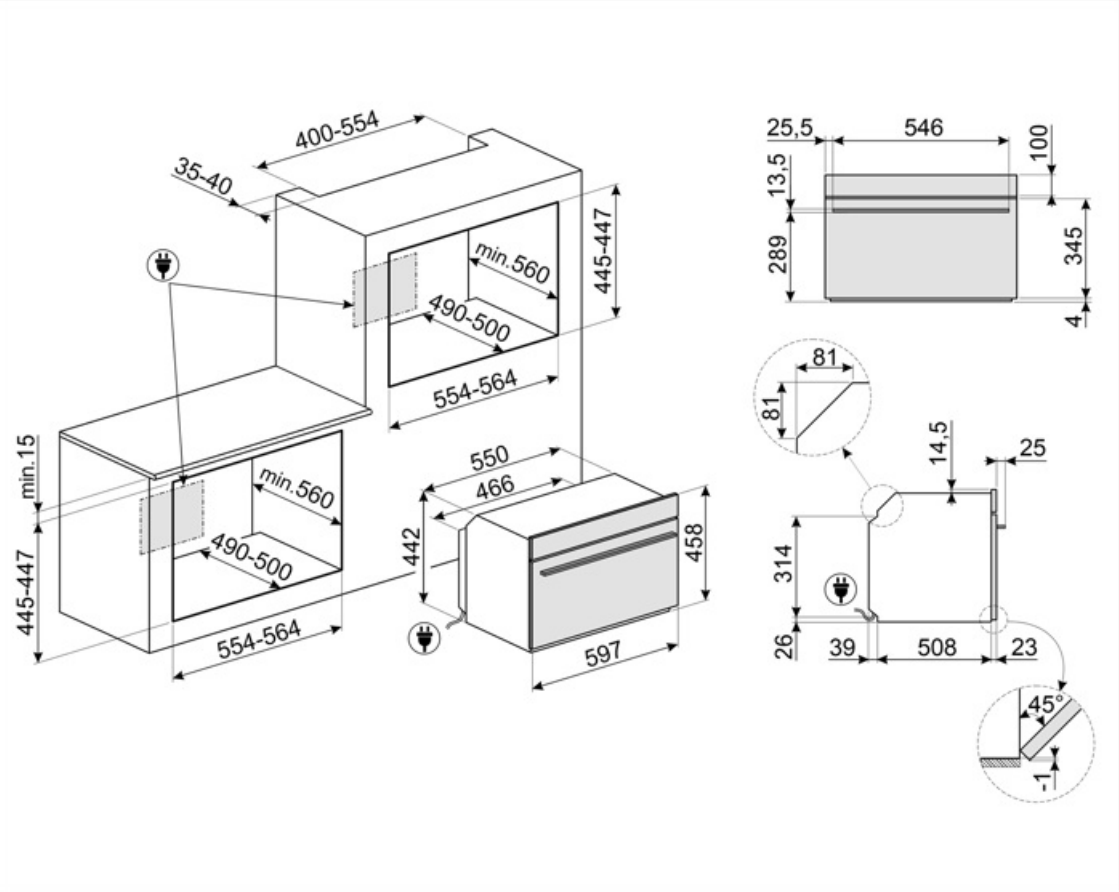
400-554
35-40
min.560
490-500
445-447
554-564
min.15
445-447
min.560
490-500
554-564
550
466
442
458
597
25,5
546
100
13,5
289
345
4
81
81
14,5
25
314
26
39
508
23
45°
1

Compatible Accessories

AIRFRY

Air fryer rack AIRFRY . Ideal for recreating traditional frying in the oven, but with fewer calories and less fat. It allows you to cook quickly and simply dishes such as French fries, fried vegetables and fish, ensuring perfect browning and crispiness.

BBQ

Double sided plate BBQ. Suitable for recreating succulent and crispy dishes in the oven with the typical taste of grilled cooking. The ribbed side is particularly suitable for meats and cheeses. The smooth side for fish, seafood and vegetables.

ET50

Enamelled tray suitable for 45 cm and 60 cm ovens. Depth 50 mm. Perfect for cooking and roasting meat and fish in sauces. Also ideal for experimenting with lighter and crunchy side dishes

AIRFRY2

Air fryer tray. Ideal for recreating traditional frying in the oven, but with fewer calories and less fat. It allows you to cook quickly and simply dishes such as French fries, fried vegetables and fish, ensuring perfect browning and crispiness.

ET20

Enamelled tray suitable for 45 cm and 60 cm ovens. Depth 20 mm. Perfect for a wide range of savoury and sweet baking.

GTP2

Partially extractable telescopic guides (1 level), suitable for traditional ovens. Made in stainless steel, they guarantee stability and facilitate the smooth extraction of the trays.

GTT2

Totally extractable telescopic guides (1 level), suitable for traditional ovens. Made in stainless steel, they guarantee stability and facilitate the smooth extraction of the trays.

STONE2

Rectangular pizza stone without handles, suitable for 45cm and 60cm wide ovens. Dimensions W42 x H1.8 x D37.5cm. Ideal for cooking pizzas with the same results as a typical wood-fired oven. Can also be used for baking bread, focaccias and other recipes such as pies, flans or biscuits

PALPZ

Pizza shovel with folding handle. Dimensions L31.5 x H32.5 cm. Easy and convenient to use and store. Perfect for serving pizza, bread and savory pastries in a safe and professional way.

Symbols glossary

Dedicated cooking function for the double sided plate BBQ. Suitable for recreating succulent and crispy dishes in the oven with the typical taste of grilled cooking. The ribbed side is particularly suitable for meats and cheeses; the smooth side for fish, seafood and vegetables.

The double chimney technology create a special airflow inside the cavity that reduce the consensation inside the cavity during microwave cooking, where the cavity is cold and the food is warm

Air cooling system: to ensure a safe surface temperatures.

Defrost by weight: Automatic defrost function. You choose the type of food to defrost from the available categories (MEAT - FISH - BREAD - DESSERTS). After entering the weight of the food, the oven automatically defines the time required for proper defrosting.

Triple glazed doors: Number of glazed doors.

ECO-logic: option allows you to restrict the power limit of the appliance real energy saving.

Ever Clean Enamel: Ever Clean enamel is applied electrostatically, corner to corner and edge to edge to prevent cracking or cracks over time. It is a particular pyrolytic enamel, resistant to acids which, in addition to being pleasantly bright, promotes greater cleaning of the oven walls, thanks to its lower porosity. It is baked at over 850 °C and slowly polymerized at a scientifically determined rate to ensure uniform depth and strength. Ever Clean enamel creates an impeccable finish both on the inside of the oven and on the trays, making the surfaces of the oven incredibly easy to maintain over time as it reduces the adhesion of fat during cooking.

Child lock: some models are fitted with a device to lock the programme/cycle so it cannot be accidentally changed.

Combination microwave: This oven allows to combine two different ways of cooking (Traditional with microwaves). Combined ovens increase cooking opportunities,while providing maximum flexibility of household appliances.

Defrost by time: Manual defrost function. At the end of the set duration, the function stops.

DeltaT cooking The oven automatically sets the cavity temperature to a predefined temperature (named deltaT) higher than the core temperature detected by the probe. When the probe detects an extra degree at the core, the oven automatically increases also its internal temperature by one degree. The oven offers the possibility to choose between three different deltaT cooking modes (slow, medium and fast) and to set any desired core temperature. A concentration of technology that makes it possible to obtain tender, juicy, healthy products of the highest quality.

Automatic lighting deactivation: For greater energy savings, the lighting turns off automatically after one minute from the start of cooking. The option can be disabled via the settings menu. In this case the light will remain on for the entire duration of cooking.

Electric

Fan assisted: Intense and homogeneous traditional cooking, also suitable for complex recipes. The fan is active and the heat comes from below and from above at the same time. Ventilated cooking ensures a faster and more homogeneous result, leaving fragrant foods outside and moister inside. Ideal for baked pasta, biscuits, roasts and cobblers.

Static: Traditional cooking suitable for the preparation of one dish at a time. The fan is not active and the heat comes from below and from above at the same time. Static cooking is slower and more delicate, ideal in order to get well cooked and dry dishes even inside. Ideal for cooking all types of roasts, fatty meats, bread, filled cakes.

Circulaire with lower element: The addition of the lower element adds extra heat at the base for food which requires extra cooking.

ECO: low energy consumption cooking: this function is particularly suitable for cooking on a single shelf with low energy consumption. It is recommended for all types of food except those that can generate a lot of moisture (for example vegetables). To achieve maximum energy savings and reduce time, it is recommended to put the food in the oven without preheating the cooking compartment.

Fan grill: very intense heat coming only from above from a double heating element. The fan is active. It allows the optimal grilling of thickest meats. Ideal for large cuts of meat.

Cooking with the simultaneous use of the heating element in combination with fan and microwave supply.

Fan combined with traditional cooking, where heat is generated from above and below, provides uniform heat. Adding the microwave function allows the same cooking results in less time.

Pizza function: Specific function for cooking pizza in a pan. It allows to obtain a pizza that is soft inside and crispy outside with the topping perfectly cooked, not dry and not burnt.

Compact appliances with a height of 45 cm - perfect solution to meet the functional requirements of kitchen sets of small height. Available in several types and in different styles.

Base: the heat comes only from the bottom of the cavity. The fan is not active. Ideal for sweet and savory pies, cobblers and pizzas. Designed to complete cooking and make food more crunchy. This symbol in gas ovens indicates the gas burner.

Circulaire: it is the perfect function for cooking all types of dishes in a more delicate way. The heat comes from the back of the oven and is distributed quickly and evenly. The fan is active. It is also ideal for cooking on multiple levels without mixing smells and flavors.

Grill: Very intense heat coming only from above from a double heating element. The fan is not active. Provides excellent grilling and gratinating results. Used at the end of cooking, it gives a uniform browning to dishes.

Microwave: Penetrating straight into the food, microwaves cook very quickly and with considerable energy savings. Suitable for cooking without fat, they are also able to thaw and heat food without altering its original appearance and aroma. The microwave function can also be combined with conventional functions with all the resulting advantages. Ideal for all types of food.

Microwave + grill element: The use of the grill results in a perfect browning of the surface of the food. The action of microwaves allows instead of cooking in a short time the internal part of the food.

This function can reheat precooked dishes, without becoming dry or hard.

Turbo: the heat comes from 3 directions: above, below and from the back of the oven. The fan is active. It allows quick cooking, even on several shelves without mixing the aromas. Ideal for large volumes or foods that require intense cooking.

KEEP_WARM_72dpi

Plate rack warming: function for heating or keeping dishes warm. Place the baking tray on the lowest shelf and stack the dishes to be heated.

Air at 40°C provides the perfect environment for proving yeast type dough mixes. Simply select the function and place dough in the cavity for allotted

SABBATH: function that allows to cook food respecting Judaism's day of rest provisions.

The oven cavity has 2 different cooking levels.

Soft close: all models are equipped with advanced function of smooth closing of the door, which allows the device to close smoothly and quietly.

Electronic control: Allows you to maintain temperature inside the oven with the precision 2-3 ° C. This enables to cook meals that are very sensitive to temperature changes, such as cakes, souffles, puddings.

Touch controls: Easy to use touch controls allow the appliance to be programmed at the touch of a button.

The capacity indicates the amount of usable space in the oven cavity in litres.

The 4.3" VIVOscreen display offers an advanced colour touch interface, for automatic management of firing programmes such as Delta T, Multi-step and SameTime firing.

INSTANT GO: activating this option allow to start cooking immediately. Preheating is included in the cooking time and the oven will gradually reach the desired temperature Particularly suitable for frozen foods.

Temperature probe: with the temperature probe it is possible to perfectly cooking roasts, loins, meat of various cuts and sizes. In fact, the probe improve food cooking, thanks to the precise control of the temperature at the heart of the dish. The core temperature of the food is measured by a special sensor located inside the tip. When the instant temperature reaches the target temperature set by the user, cooking is finished

Rapid preheating: cooking is preceded by the preheating phase which allows the cooking compartment to reach the set temperature. This option reduces the time by up to 50%.

Option designed to solve any doubts More than 100 pop-ups, which can be triggered with a long touch on any icon, provide information on the use of the display and cooking.

Smart Cooking is the perfect recipe for every occasion. Meat, fish, pasta, desserts, etc . up to 150 automatic recipes that allow to make any preparation in a single click. Decide your menu and then the oven takes care of the rest.

Telescopic rails: allow you to pull out the dish and check it without having to remove it from the oven entirely.

Tilting grill: the tilting grill can be easily unhooked to move the heating element and clean the roof of the appliance in one simple step.

Vapor Clean: a simple cleaning function using steam to loosen deposits in the oven cavity.

The capacity indicates the amount of usable space in the oven cavity in litres.

Keep warm: the function allows to keep cooked food warm.

Active and controlled microwave distribution The Microwave Stirrer fan distributes the waves evenly within the oven, reducing the need for a turntable.

The multi-point temperature probe has three detection points. This means that not only the core temperature is detected, but also the temperature in other areas. The oven will process all these data to avoid cooking unevenness. In this way each product can be cooked in a professional, restaurant style.

The inverter technology allows to generate microwaves continuously and at the desired power The constant flow, without on and off cycles, allows you to precisely control the temperature, reduce times, avoids wasting energy and allows you to obtain excellent cooking, defrosting and re-heating results, thanks to the smaller difference between core and surface temperature in food

Dedicated cooking function for the rectangular refractory stone PPR2 Dimensions Ideal for cooking pizzas with the same results as a typical wood-fired oven. Can also be used for baking bread, focaccias and other recipes such as pies, flans or biscuits

The perfect way to have a complete menu in a few simple steps with a considerable saving of time. The large cavity can accommodate multiple types of food at the same time, which can be cooked without any exchange of odors. The carefully studied thermodynamic flows ensure uniform cooking at every level. The SameTime algorithm calculates the times, the cooking functions and all the parameters so that 3 foods can be ready at the same time

Dedicated cooking function for the Air fryer rack AIRFRY . Ideal for recreating traditional frying in the oven, but with fewer calories and less fat. It allows you to cook quickly and simply dishes such as French fries, fried vegetables and fish, ensuring perfect browning and crispiness.