SO4202M1BI

Category	45 cm
Product Family	Oven
Power supply	Electric
Heat source	ELECTRICITY
Cooking method	Combi Microwave
Galileo platform	Micro combi
Cleaning system	Vapor Clean
EAN code	8017709365493



Aesthetics

Aesthetic	Musa	**Serigraphy colour**	Grey
Colour	Black	**Serigraphy type**	Symbols
Finishing	Glossy	**Door**	Full glass
Design	Flat	**Handle**	Musa
Material	Glass	**Handle Colour**	Black
Glass Type	Eclipse	**Logo**	Silk screen

Controls

Display name	EvoScreen	**Control setting**	Full touch
Display technology	LCD		

Programs / Functions main oven

No. of cooking functions 11

Traditional cooking functions

- Static
- Fan assisted
- Circulaire
- Eco
- Large grill
- Base
- Pizza

Microwave functions

 Microwave

 Fan assisted

 Circulaire

 Microwave + grill

Other functions

 Defrost by time

 Leavening

 Stone cooking

 BBQ

 Air-Fry

 Sabbath

Cleaning functions

 Vapor Clean

Options



Time-setting options	Delay start and automatic end cooking	**Other options**	Keep warm, Eco light, Brightness, Tones
Minute minder	Yes	**Showroom demo option**	Yes
Timer	1	**Rapid pre-heating**	Yes
Controls Lock / Child Safety	Yes		

Technical Features



Capacity (Lt)	40 l	**Door opening type**	Standard opening
Cavity	QS-Galileo	**Door**	Temperate door
Minimum Temperature	25 °C	**Total no. of door glasses**	3
Maximum temperature	250 °C	**Microwave stops when door is opened**	Yes
No. of shelves	2	**Soft Close hinges**	Yes
No. of lights	2	**Soft Open**	Yes
Light type	Halogen	**Chimney**	Fixed
Light Power	40 W	**Cooling system**	Tangential
Light when door is opened	Yes	**Cooling duct**	Single
Lower heating element power	1000 W	**Usable cavity space dimensions (HxWxD)**	211x462x401 mm
Grill element - power	2000 W	**Temperature control**	Electronic
Circular heating element - Power	1400 W	**Cavity material**	Ever clean Enamel
Heating suspended when door is opened	Yes	**Microwave screen protection**	Yes

Performance / Energy Label

Net volume of the cavity	40 l	**Microwave effective power**	800 W
Number of cavities	1	**Microwave - Output power**	800 W

Accessories included

Rack with back stop (concave)	1	**Glass tray**	1
Insert gird	1		

Electrical Connection

Voltage	220-240 V	**Nominal power**	3300 W
Plug	Cable with free ends	**Frequency (Hz)**	50 Hz
Current	15 A	**Power supply cable length**	150 cm

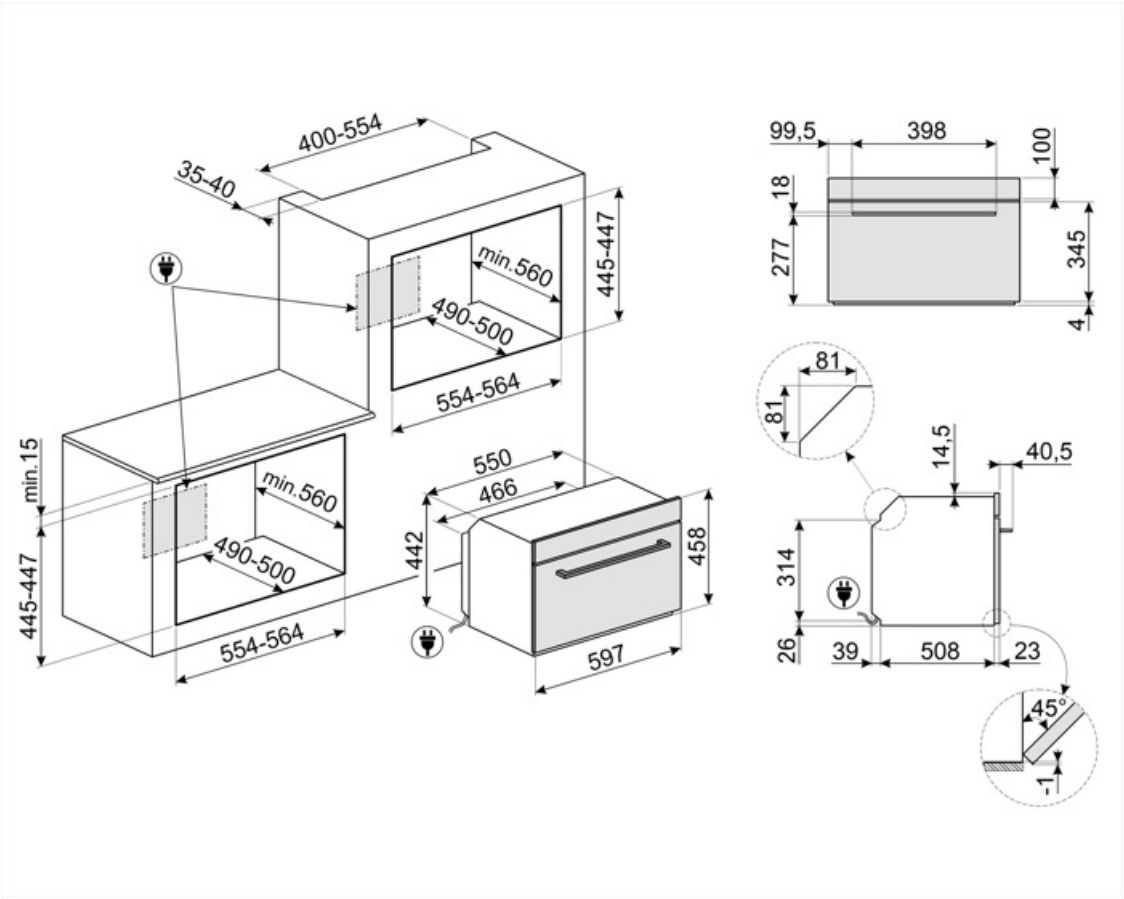

Compatible Accessories



AIRFRY2

Air fryer tray. Ideal for recreating traditional frying in the oven, but with fewer calories and less fat. It allows you to cook quickly and simply dishes such as French fries, fried vegetables and fish, ensuring perfect browning and crispiness.



ET20

Enamelled tray suitable for 45 cm and 60 cm ovens. Depth 20 mm. Perfect for a wide range of savoury and sweet baking.



GTT2

Totally extractable telescopic guides (1 level), suitable for traditional ovens. Made in stainless steel, they guarantee stability and facilitate the smooth extraction of the trays.



BBQ

Double sided plate BBQ. Suitable for recreating succulent and crispy dishes in the oven with the typical taste of grilled cooking. The ribbed side is particularly suitable for meats and cheeses. The smooth side for fish, seafood and vegetables.



ET50

Enamelled tray suitable for 45 cm and 60 cm ovens. Depth 50 mm. Perfect for cooking and roasting meat and fish in sauces. Also ideal for experimenting with lighter and crunchy side dishes



STONE2

Rectangular pizza stone without handles, suitable for 45cm and 60cm wide ovens. Dimensions W42 x H1.8 x D37.5cm. Ideal for cooking pizzas with the same results as a typical wood-fired oven. Can also be used for baking bread, focaccias and other recipes such as pies, flans or biscuits

Symbols glossary



Child lock: some models are fitted with a device to lock the programme/cycle so it cannot be accidentally changed.



Air cooling system: to ensure a safe surface temperatures.



Triple glazed doors: Number of glazed doors.



Electric



Fan assisted: Intense and homogeneous traditional cooking, also suitable for complex recipes. The fan is active and the heat comes from below and from above at the same time. Ventilated cooking ensures a faster and more homogeneous result, leaving fragrant foods outside and moister inside. Ideal for baked pasta, biscuits, roasts and cobblers.



Base: the heat comes only from the bottom of the cavity. The fan is not active. Ideal for sweet and savory pies, cobblers and pizzas. Designed to complete cooking and make food more crunchy. This symbol in gas ovens indicates the gas burner.



ECO: low energy consumption cooking: this function is particularly suitable for cooking on a single shelf with low energy consumption. It is recommended for all types of food except those that can generate a lot of moisture (for example vegetables). To achieve maximum energy savings and reduce time, it is recommended to put the food in the oven without preheating the cooking compartment.



Combination microwave: This oven allows to combine two different ways of cooking (Traditional with microwaves). Combined ovens increase cooking opportunities,while providing maximum flexibility of household appliances.



Defrost by time: Manual defrost function. At the end of the set duration, the function stops.



Automatic lighting deactivation: For greater energy savings, the lighting turns off automatically after one minute from the start of cooking. The option can be disabled via the settings menu. In this case the light will remain on for the entire duration of cooking.



Ever Clean Enamel: Ever Clean enamel is applied electrostatically, corner to corner and edge to edge to prevent cracking or cracks over time. It is a particular pyrolytic enamel, resistant to acids which, in addition to being pleasantly bright, promotes greater cleaning of the oven walls, thanks to its lower porosity. It is baked at over 850 °C and slowly polymerized at a scientifically determined rate to ensure uniform depth and strength. Ever Clean enamel creates an impeccable finish both on the inside of the oven and on the trays, making the surfaces of the oven incredibly easy to maintain over time as it reduces the adhesion of fat during cooking.



Static: Traditional cooking suitable for the preparation of one dish at a time. The fan is not active and the heat comes from below and from above at the same time. Static cooking is slower and more delicate, ideal in order to get well cooked and dry dishes even inside. Ideal for cooking all types of roasts, fatty meats, bread, filled cakes.



Circulaire: it is the perfect function for cooking all types of dishes in a more delicate way. The heat comes from the back of the oven and is distributed quickly and evenly. The fan is active. It is also ideal for cooking on multiple levels without mixing smells and flavors.



Grill: Very intense heat coming only from above from a double heating element. The fan is not active. Provides excellent grilling and gratinating results. Used at the end of cooking, it gives a uniform browning to dishes.

Microwave: Penetrating straight into the food, microwaves cook very quickly and with considerable energy savings. Suitable for cooking without fat, they are also able to thaw and heat food without altering its original appearance and aroma. The microwave function can also be combined with conventional functions with all the resulting advantages. Ideal for all types of food.

Cooking with the simultaneous use of the heating element in combination with fan and microwave supply.

Microwave + grill element: The use of the grill results in a perfect browning of the surface of the food. The action of microwaves allows instead of cooking in a short time the internal part of the food.

Fan combined with traditional cooking, where heat is generated from above and below, provides uniform heat. Adding the microwave function allows the same cooking results in less time.

Pizza function: Specific function for cooking pizza in a pan. It allows to obtain a pizza that is soft inside and crispy outside with the topping perfectly cooked, not dry and not burnt.

Compact appliances with a height of 45 cm - perfect solution to meet the functional requirements of kitchen sets of small height. Available in several types and in different styles.

KEEP WARM

Side lights: Two opposing side lights increase visibility inside the oven.

Air at 40°C provides the perfect environment for proving yeast type dough mixes. Simply select the function and place dough in the cavity for allotted

Rapid preheating: cooking is preceded by the preheating phase which allows the cooking compartment to reach the set temperature. This option reduces the time by up to 50%.

SABBATH: function that allows to cook food respecting Judaism's day of rest provisions.

The oven cavity has 2 different cooking levels.

Soft close: all models are equipped with advanced function of smooth closing of the door, which allows the device to close smoothly and quietly.

Electronic control: Allows you to maintain temperature inside the oven with the precision 2-3 ° C. This enables to cook meals that are very sensitive to temperature changes, such as cakes, souffles, puddings.

Touch controls: Easy to use touch controls allow the appliance to be programmed at the touch of a button.

Vapor Clean: a simple cleaning function using steam to loosen deposits in the oven cavity.

The capacity indicates the amount of usable space in the oven cavity in litres.

The capacity indicates the amount of usable space in the oven cavity in litres.

The new EVOscreen display is enhanced with new, optimised colour graphics: 5 touch buttons control functions and parameters in an extremely simple way.

Dedicated cooking function for the double sided plate BBQ. Suitable for recreating succulent and crispy dishes in the oven with the typical taste of grilled cooking. The ribbed side is particularly suitable for meats and cheeses; the smooth side for fish, seafood and vegetables.

Dedicated cooking function for the Air fryer rack AIRFRY . Ideal for recreating traditional frying in the oven, but with fewer calories and less fat. It allows you to cook quickly and simply dishes such as French fries, fried vegetables and fish, ensuring perfect browning and crispiness.

Dedicated cooking function for the rectangular refractory stone PPR2 Dimensions Ideal for cooking pizzas with the same results as a typical wood-fired oven. Can also be used for baking bread, focaccias and other recipes such as pies, flans or biscuits