SO4204S4PBI

Category	45cm Compact Ovens
Product Family	Oven
Vitality system	Yes
Power supply	Electric
Heat source	Electric
Cooking method	Combi Steam
Galileo cavity	Steam100 Pro
Cleaning system	Vapor Clean
EAN code	8017709365578



Aesthetics

Aesthetics	Musa	**Serigraphy type**	Symbols
Colour	Black	**Door**	Full glass
Design	Flat	**Handle**	Musa
Material	Glass	**Handle Colour**	Black
Glass Type	Eclipse	**Logo**	Silk screen
Serigraphy colour	Grey		

Controls

Display name	VivoScreen	**No. of display languages**	20
Display technology	TFT		
Control setting	Advanced full touch	**Display languages**	Italiano, English (UK), Français (FR), Français (CA), Nederlands, Español (ES), Español (MX), Português (PT), Svenska, Русский, Deutsch (DE), Dansk, Norsk, Polski, English (AU), Suomi, Ukrainian, Kazakh, Afrikaans (ZA), Zulu (ZA)

Programs / Functions

No. of cooking functions	20
Automatic programmes	150
Steam assisted levels	3 + manual

Customisable recipes 10

Traditional cooking functions

 Static

 Fan assisted

 Ciculaire



Turbo (circulaire + bottom + upper + fan)

 ECO

 Large grill

 Fan grill (large)

 Base

 Circulaire + bottom

 Pizza

Cooking functions with pulsed steam

 Fan assisted

 Circulaire

 Circulaire + Bottom + Fan



Turbo (circulaire + bottom + upper + fan)

 Fan Grill

Cooking functions with steam

 Manual steam

 Steam + bottom + upper + fan

 Steam + circulaire + fan

Circulaire + Bottom + Fan

 Warming and re-generation

 Sous Vide

Other Steam functions

 Tank cleaning

 Water outlet

 Water input

 Descaling

Other functions

 Defrost by time

 Defrost by weight

 Proving

 Stone cooking

 BBQ

 Air-Fry

 Keep warm

 Plate rack/warmer

 Sabbath

Cleaning functions

 Vapor Clean

Options

Time-setting options	Delay start and automatic end cooking
Minute minder	Yes
Timer	1
Other options	Keep warm, Eco light, Language setting, Digital clock display, Brightness, Tones, Tones volume
Cooking with probe thermometer	Yes
Multi-step cooking	Yes, up to 2 steps
Smart cooking	Yes
SameTime	Yes
DeltaT cooking	Yes
Showroom demo option	Yes
Demo-tutorial mode	Yes
Touch guide	Yes
History	Yes, the last 10 functions utilised
Rapid pre-heating	Yes
Instant GO	Yes

Technical Features

Capacity (Lt)	41 l
Cavity	QS-Galileo
Minimum Temperature	25 °C
Maximum temperature	250 °C
Shelf positions	2
No. of lights	2
Light type	LED
Light power	5 W
Light when door is opened	Yes
Lower heating element power	1200 W
Upper heating element - Power	1000 W
Grill element - power	1700 W
Large grill - Power	2700 W
Circular heating element - Power	2000 W
Heating suspended when door is opened	Yes
Door opening type	Standard opening
Door	Temperate door
Removable door	Yes
Full glass inner door	Yes
Removable inner door	Yes
Total no. of door glasses	3
Soft Close hinges	Yes
Soft Open	Yes
Chimney	Variable
Cooling system	Centrifugal
Cooling duct	Single
Steam range	20 - 100%
Usable cavity space dimensions (HxWxD)	214x462x397 mm
Temperature control	Electronic
Cavity material	Easy clean enamel
Water loading	Fill&Hide 2 , automatic
Tank capacity	2 l

Performance / Energy Label

Energy efficiency class	A++
Net volume of the cavity	41 litres
Energy consumption per cycle in conventional mode	0.80 kWh
Energy consumption in forced air convection	1.58 MJ
Energy consumption per cycle in fan-forced convection	0.44 kWh
Number of cavities	1
Energy efficiency index	61.1 %

Energy consumption in conventional mode	2.88 MJ

Accessories Included

Chrome shelf	1	**St/steel perforated deep tray (40mm)**	1
Enamelled deep tray (50mm)	1	**Telescopic Guide rails, total Extraction**	1
Grill mesh	1	**Temperature probe**	Yes, multipoint
St/steel tray (20mm)	1		

Electrical Connection

Voltage	220-240 V	**Nominal power (W)**	3000 W
Plug	Cable with free ends	**Frequency (Hz)**	50/60 Hz
Current	13 A	**Power supply cable length**	150 cm

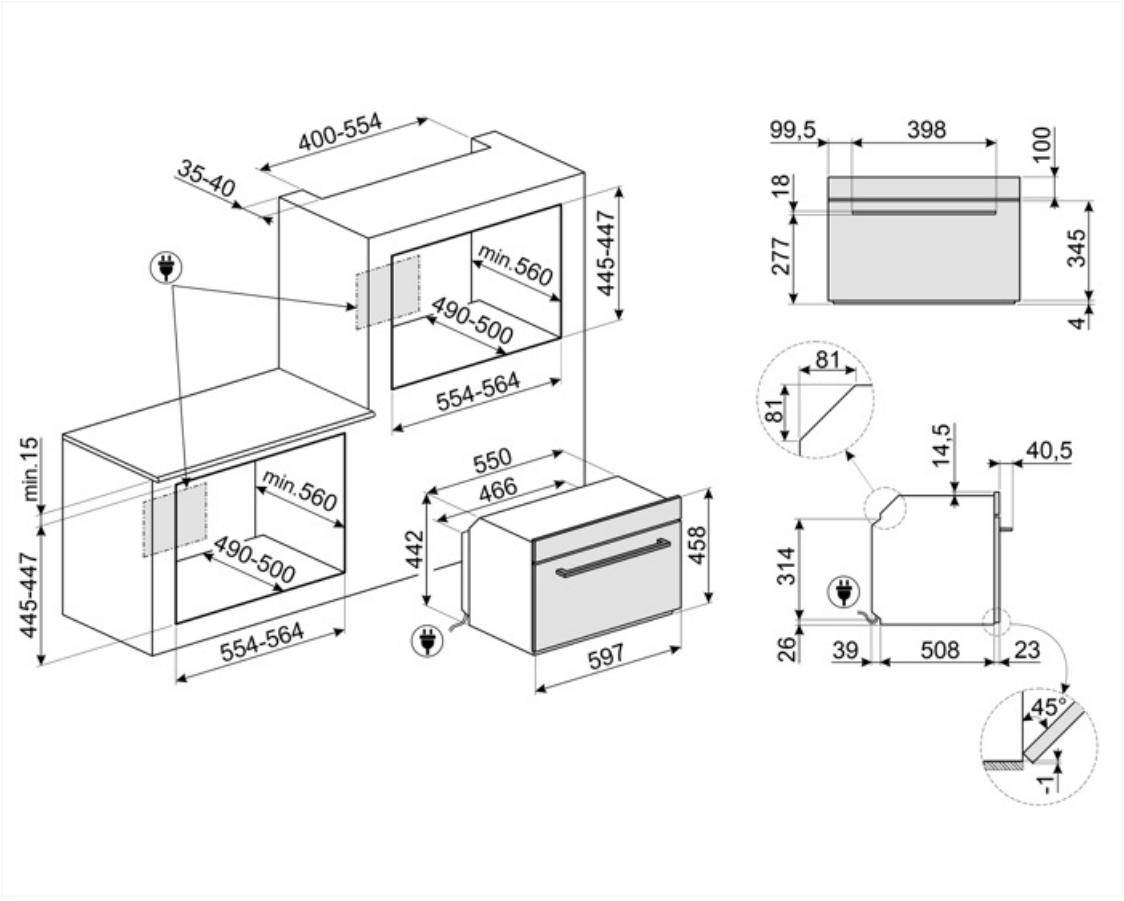

Compatible Accessories



BBQ

Double sided plate BBQ. Suitable for recreating succulent and crispy dishes in the oven with the typical taste of grilled cooking. The ribbed side is particularly suitable for meats and cheeses. The smooth side for fish, seafood and vegetables.



ET50

Enamelled tray, 50mm deep



STONE2

Rectangular pizza stone without handles, suitable for 45cm and 60cm wide ovens. Dimensions W42 x H1.8 x D37.5cm. Ideal for cooking pizzas with the same results as a typical wood-fired oven. Can also be used for baking bread, focaccias and other recipes such as pies, flans or biscuits



ET20

Enamelled tray, 20mm deep



GTTV2

Totally extractable telescopic guides (1 level), suitable for steam ovens. Made in stainless steel, they guarantee stability and facilitate the smooth extraction of the trays.

Symbols glossary



A++: Energy efficiency class A++ helps to save up to 20% energy compared to class A. Maximum performance with minimum consumption is guaranteed.



Defrost by time: with this function the time of thawing of foods are determined automatically.



Descaling function: Is essential to remove excess deposits of limestone in the tank and allow the proper operation of the product. The need to perform this operation is signaled by the product itself.



Automatic lighting switches off: for greater energy savings, the lighting switches off automatically after one minute from the start of cooking.



Enamel interior: The enamel interior of all Smeg ovens have a special antacid lining which helps keep the interior clean by reducing the amount of cooking grease adhering to it.



Upper and lower element only: a traditional cooking method best suited for single items located in the centre of the oven. the top pf the oven will always be hottest. Ideal for roast, fruit cakes, bread etc.



Circulaire with lower element: The addition of the lower element adds extra heat at the base for food which requires extra cooking.



ECO: The combination of the grill, fan and lower element is particularly suitable for cooking small quantities of food.



Fan with grill element: The fan reduces the fierce heat from the grill, providing an excellent method of grilling various foods, chops, steaks, sausages etc. giving even browning and heat distribution, without drying out the food. The top two levels recommended for use, and the lower part of the oven can be used to keep items warm at the same time, an excellent facility when cooking a grilled breakfast. Half grill (centre portion only) is ideal for small quantities of food.



Combination steam: ovens can be used either as a steam oven, or as a traditional oven, or alternatively the two methods can be combined.



Defrost by weight: With this function the defrosting time is determined



Triple glazed doors: Number of glazed doors.



Electric



Fan with upper and lower elements: The elements combined with the fan aim to provide more uniform heat, a similar method to conventional cooking, so pre-heat is required. Most suitable for items requiring slow cooking methods.



Lower heating element only: This function is ideal for foods that require extra base temperature without browning, e.g. pastry dishes, pizza. Also suitable for slow cooking of stews and casseroles.



Circulaire: The combination of the fan and circular element around it gives a hot air cooking method. This provides many benefits including no preheat if cook time is more than 20 minutes, no flavour transfer when cooking different foods at the same time, less energy, and shorter cook times. Good for all types of food.



Grill element: Using of grill gives excellent results when cooking meat of medium and small portions, especially when combined with a rotisserie (where possible). Also ideal for cooking sausages and bacon.



Pizza function: The simultaneous operation of three elements ensures an optimum cooking facility when used with the Smeg pizza stone.

Sous Vide Cooking: Steam function for perfect cooking of sous vide dishes. Enhances the taste of dishes and keeps their appearance and nutrients unaltered. Vacuum cooking (Sous Vide) made with the help of a steam oven is also an incredibly healthy and genuine type of cooking. The Sous Vide cooking technique allows heat to be efficiently transferred from the steam to the food, avoiding the loss of flavour due to oxidation and the evaporation of nutrients and moisture during cooking. Sous Vide cooking also allows better control over the cooking of food compared to traditional methods, ensuring uniform cooking results. It also allows cooking at a lower temperature than traditional cooking.

Steam cooking: it`s a natural way of cooking for any kind of products, from vegetables to desserts, to preserve the nutritional and organoleptic properties of ingredients. Ideal for cooking without fat, to heat up food without drying. Steam is ideal for simultaneous cooking of meals that require different cooking times.

Fan combined with traditional cooking, where heat is generated from above and below, provides uniform heat. Adding the steam function allows the same cooking results in less time.

Circulaire element with steam: Cooking with the simultaneous use of the circular heating element in combination with fan and steam supply.

FUN_STEAM_OTHER_WATER_IN_OUT_72dpi

Reheat: This function can reheat precooked dishes, without becoming dry or hard.

Circulaire with upper and lower elements: The use of the fan with both elements allows food to be cooked quickly and effectively, ideal for large joints that require thorough cooking. It offers a similar result to rotisserie, moving the heat around the food, instead of moving the food itself, enabling any size or shape to be cooked.

Fan with grill with steam assist: For creating a perfectly roasted meat joint. The extra moisture keeps the meat juicy and tender, whilst the heat from the turbo function creates the caramelised flavours we know and love.

Circulaire with steam assist: Provides extra moisture to food during cooking. Excellent for bread baking. The moisture allows the bread dough to stretch further at the beginning of cooking, creating an aerated and light textured dough. The remaining part of the cooking process allows for the signature crust to form.

Circulaire + lower element with steam assist: Ideal for reheating flans and quiches. This function will re-crisp the base, whilst filling will not dry out due to the additional moisture in the cooking cavity.

Circulaire with steam assist: Provides extra moisture to food during cooking. Excellent for bread baking. The moisture allows the bread dough to stretch further at the beginning of cooking, creating an aerated and light textured dough. The remaining part of the cooking process allows for the signature crust to form.

Turbo with steam assist: For creating a perfectly roasted meat joint. The extra moisture keeps the meat juicy and tender, whilst the heat from the turbo function creates the caramelised flavours we know and love.

Compact appliances with a height of 45 cm - perfect solution to meet the functional requirements of kitchen sets of small height. Available in several types and in different styles.

All glass inner door: All glass inner door, a single flat surface which is simple to keep clean.

The inner door glass: can be removed with a few quick movements for cleaning.

Keep warm: This function allows you to keep precooked foods warm.

Warming up: An option for dish warming and keeping the prepared meals hot.

Air at 40°C provides the perfect environment for proving yeast type dough mixes. Simply select the function and place dough in the cavity for allotted

Sabbath: This function allows you to cook food whilst respecting the provisions of the Jewish day of rest.

The oven cavity has 2 different cooking levels.

Soft close: all models are equipped with advanced function of smooth closing of the door, which allows the device to close smoothly and quietly.

Telescopic rails: allow you to pull out the dish and check it without having to remove it from the oven entirely.

Vapor Clean: a simple cleaning function using steam to loosen deposits in the oven cavity.

The capacity indicates the amount of usable space in the oven cavity in litres.

Keep warm: the function allows to keep cooked food warm.

The multi-point temperature probe has three detection points. This means that not only the core temperature is detected, but also the temperature in other areas. The oven will process all these data to avoid cooking unevenness. In this way each product can be cooked in a professional, restaurant style.

Sametime: The perfect way to have a complete menu in a few simple steps. The SameTime algorithm calculates the times, the cooking functions and all the parameters so that 3 foods can be ready at the same time.

Cooking with temperature probe: It is possible to display the temperature detected by the probe and set a target temperature that the dish must reach. When the core of the dish reaches the desired temperature, cooking stops

Rapid preheat: The rapid preheat function can be used to reach the selected temperature in just a few minutes.

Touch guide: By holding down any symbol for 3 seconds you can get information on its function

Smart Cooking System: for the perfect cooking it is simply necessary choosing the kind and the weight of food and the cooking temperature: any other setting will be established automatically.

To guarantee the optimal functioning of the appliance, it is suggested to carry out the tank cleaning roughly once every 2-3 months.

Electronic control: Allows you to maintain temperature inside the oven with the precision 2-3 ° C. This enables to cook meals that are very sensitive to temperature changes, such as cakes, souffles, puddings.

The capacity indicates the amount of usable space in the oven cavity in litres.

The 4.3" VIVOscreen display offers an advanced colour touch interface, for automatic management of firing programmes such as Delta T, Multi-step and SameTime firing.

Instant go: activating this option allows cooking to start immediately. Preheating is included in the cooking time and the oven will gradually reach the desired temperature. Particularly suitable for frozen foods.

Fill & Hide: The water load system is designed to enhance the aesthetics of the oven. The loading and unloading tube can be easily removed from the oven and the water refilled at any time during the cooking cycle, without opening the door , guaranteeing an infinite duration of steam.

Dedicated cooking function for the double sided plate BBQ. Suitable for recreating succulent and crispy dishes in the oven with the typical taste of g



Dedicated cooking function for the Air fryer rack AIRFRY . Ideal for recreating traditional frying in the oven, but with fewer calories and less fat.



DeltaT cooking: The oven automatically sets the cavity temperature to a predefined temperature (named deltaT) higher than the core temperature detected by the probe. When the probe detects an extra degree at the core, the oven automatically increases also its internal temperature by one degree.



Dedicated cooking function for the rectangular refractory stone PPR2 Dimensions Ideal for cooking pizzas with the same results as a typical wood-fire