SO4401M1X

Category	45cm Compact Ovens
Product Family	Oven
Power supply	Electric
Heat source	Electric
Cooking method	Combi Microwave
Galileo cavity	Micro combi
Cleaning system	Ever Clean enamel
EAN code	8017709325732



Aesthetics

Aesthetics	Cucina	**Serigraphy colour**	Black
Colour	Stainless steel	**Serigraphy type**	Symbols
Finishing	Fingerproof	**Door**	With panel
Design	Flat	**Handle**	Squared Selection
Material	Stainless steel	**Handle Colour**	Stainless steel
Type of steel	Brushed	**Logo**	Embossed
Glass Type	Eclipse	**Control knobs**	Selection

Controls

Display name	CompactScreen	**Control setting**	Control knobs
Display technology	LCD	**No. of controls**	2

Programs / Functions

No. of cooking functions	10

Traditional cooking functions

Static

Fan assisted

Ciculaire

Turbo (circulaire + bottom + upper + fan)

ECO

Large grill

Microwave functions

Microwave

Microwave + bottom + top + fan

Microwave + circulaire + fan

Microwave + grill

Other functions

Defrost by time

Options

Time-setting options	Delay start and automatic end cooking	**Other options**	Keep warm
Minute minder	Yes	**Showroom demo option**	Yes
Timer	1	**Rapid pre-heating**	Yes
Controls Lock / Child Safety	Yes		

Technical Features

Capacity (Lt)	40 l	**Door opening type**	Standard opening
Cavity	QS-Galileo	**Door**	Temperate door
Minimum Temperature	30 °C	**Total no. of door glasses**	3
Maximum temperature	250 °C	**Microwave stops when door is opened**	Yes
Shelf positions	2	**Chimney**	Fixed
No. of lights	1	**Cooling system**	Tangential
Light type	Halogen	**Cooling duct**	Single
Light power	40 W	**Usable cavity space dimensions (HxWxD)**	211x462x401 mm

Light when door is opened	Yes	**Temperature control**	Electronic
Grill element - power	1500 W	**Cavity material**	Easy clean enamel
Heating suspended when door is opened	Yes	**Microwave screen protection**	Yes

Performance / Energy Label

Net volume of the cavity	40 litres	**Microwave effective power**	800 W
Number of cavities	1		

Accessories Included

Chrome shelf	1	**Glass tray**	1
Grill mesh	1		

Electrical Connection

Voltage	220-240 V	**Nominal power (W)**	3100 W
Plug	No	**Frequency (Hz)**	50 Hz
Current	14 A	**Power supply cable length**	150 cm

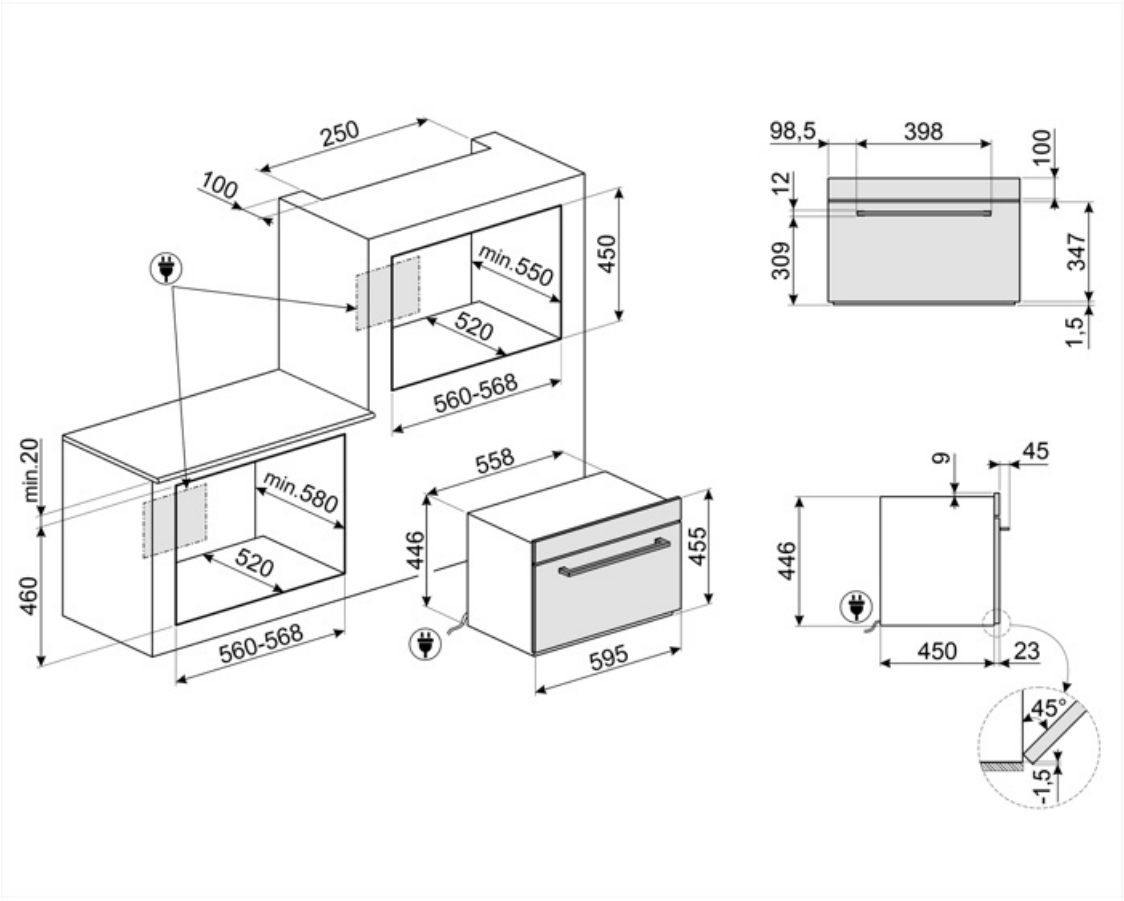

Compatible Accessories



AIRFRY2

Air fryer tray. Ideal for recreating traditional frying in the oven, but with fewer calories and less fat. It allows you to cook quickly and simply dishes such as French fries, fried vegetables and fish, ensuring perfect browning and crispiness.



ET20

Enamelled tray, 20mm deep



GTT2

Totally extractable telescopic guides (1 level), suitable for traditional ovens. Made in stainless steel, they guarantee stability and facilitate the smooth extraction of the trays.



BBQ

Double sided plate BBQ. Suitable for recreating succulent and crispy dishes in the oven with the typical taste of grilled cooking. The ribbed side is particularly suitable for meats and cheeses. The smooth side for fish, seafood and vegetables.



ET50

Enamelled tray, 50mm deep



STONE2

Rectangular pizza stone without handles, suitable for 45cm and 60cm wide ovens. Dimensions W42 x H1.8 x D37.5cm. Ideal for cooking pizzas with the same results as a typical wood-fired oven. Can also be used for baking bread, focaccias and other recipes such as pies, flans or biscuits

Symbols glossary



Child lock: some models are fitted with a device to lock the programme/cycle so it cannot be accidentally changed.



Air cooling system: to ensure a safe surface temperatures.



Triple glazed doors: Number of glazed doors.



Enamel interior: The enamel interior of all Smeg ovens have a special antacid lining which helps keep the interior clean by reducing the amount of cooking grease adhering to it.



Upper and lower element only: a traditional cooking method best suited for single items located in the centre of the oven. the top pf the oven will always be hottest. Ideal for roast, fruit cakes, bread etc.



ECO: The combination of the grill, fan and lower element is particularly suitable for cooking small quantities of food.



Microwave: Penetrating straight into the food, microwaves cook very quickly and with considerable energy savings. Suitable for cooking without fat, they are also able to thaw and heat food without altering its original appearance and aroma. The microwave function can also be combined with conventional functions with all the resulting advantages. Ideal for all types of food.



Microwave + grill element: The use of the grill results in a perfect browning of the surface of the food. The action of microwaves allows instead of cooking in a short time the internal part of the food.



Circulaire with upper and lower elements: The use of the fan with both elements allows food to be cooked quickly and effectively, ideal for large joints that require thorough cooking. It offers a similar result to rotisserie, moving the heat around the food, instead of moving the food itself, enabling any size or shape to be cooked.



Combination microwave: This oven allows to combine two different ways of cooking (Traditional with microwaves). Combined ovens increase cooking opportunities,while providing maximum flexibility of household appliances.



Defrost by time: with this function the time of thawing of foods are determined automatically.



Electric



Fan with upper and lower elements: The elements combined with the fan aim to provide more uniform heat, a similar method to conventional cooking, so pre-heat is required. Most suitable for items requiring slow cooking methods.



Circulaire: The combination of the fan and circular element around it gives a hot air cooking method. This provides many benefits including no preheat if cook time is more than 20 minutes, no flavour transfer when cooking different foods at the same time, less energy, and shorter cook times. Good for all types of food.



Grill element: Using of grill gives excellent results when cooking meat of medium and small portions, especially when combined with a rotisserie (where possible). Also ideal for cooking sausages and bacon.



Cooking with the simultaneous use of the heating element in combination with fan and microwave supply.



Fan combined with traditional cooking, where heat is generated from above and below, provides uniform heat. Adding the microwave function allows the same cooking results in less time.



Compact appliances with a height of 45 cm - perfect solution to meet the functional requirements of kitchen sets of small height. Available in several types and in different styles.

Keep warm: This function allows you to keep precooked foods warm.

Rapid preheat: The rapid preheat function can be used to reach the selected temperature in just a few minutes.

Electronic control: Allows you to maintain temperature inside the oven with the precision 2-3 ° C. This enables to cook meals that are very sensitive to temperature changes, such as cakes, souffles, puddings.

The capacity indicates the amount of usable space in the oven cavity in litres.

Side lights: Two opposing side lights increase visibility inside the oven.

The oven cavity has 2 different cooking levels.

The capacity indicates the amount of usable space in the oven cavity in litres.

With a simple and intuitive interface, the COMPACTscreen provides a pleasant user experience, thanks to the interaction with the knobs.