SO6102M2B3



Category	60 cm
Product Family	Oven
Power supply	Electric
Cooking method	Combi Microwave
Galileo platform	SpeedwaveXL
Cleaning system	Vapor Clean
EAN code	8017709327729

Aesthetics

Aesthetic	Linea	**Serigraphy type**	Symbols
Colour	Black	**Door**	Full glass
Finishing	Glossy	**Handle**	Linea minimal
Design	Flat	**Handle Colour**	Black
Material	Glass	**Logo**	Silk screen
Glass Type	Clear	**Controls colour**	Matt black
Serigraphy colour	Grey		

Controls

Display name	EvoScreen	**Control setting**	Full touch
Display technology	LCD		

Programs / Functions main oven

No. of cooking functions 11

Traditional cooking functions

Static

Fan assisted

Circulaire

Eco

Large grill

Base

Pizza

Microwave functions

- Microwave
- Fan assisted
- Circulaire
- Microwave + grill

Other functions

- Defrost by time
- Leavening
- Stone cooking
- BBQ
- Air-Fry
- Melt
- Soft
- Pop-corn
- Sabbath

Cleaning functions

- Vapor Clean

Options

Time-setting options	Delay start and automatic end cooking	**Other options**	Keep warm, Eco light, Brightness, Tones
Minute minder	Yes	**Showroom demo option**	Yes
Timer	1	**Rapid pre-heating**	Yes
Controls Lock / Child Safety	Yes		

Technical Features

Capacity (Lt)	68 l	**Door opening type**	Standard opening
Cavity	QS-Galileo	**Door**	Cool
Minimum Temperature	25 °C	**Full glass inner door**	Yes
Maximum temperature	250 °C	**Total no. of door glasses**	4
No. of shelves	5	**Soft Close hinges**	Yes
N. of fans	1	**Soft Open**	Yes
No. of lights	2	**Inverter**	Yes
Light type	Halogen	**Stirrer**	Yes
User-replaceable light	Yes	**Chimney**	Double
Light Power	40 W	**Cooling system**	Centrifugal
Light when door is opened	Yes	**Cooling duct**	Double
Lower heating element power	1200 W	**Speed Reduction Cooling System**	Yes
Grill element - power	1750 W	**Usable cavity space dimensions (HxWxD)**	353x470x397 mm
Circular heating element - Power	2000 W	**Temperature control**	Electronic
Heating suspended when door is opened	Yes	**Cavity material**	Ever clean Enamel

Performance / Energy Label

Net volume of the cavity	68 l	**Microwave effective power**	900 W
Number of cavities	1		

Accessories included

Rack with back stop	1	**Glass tray**	1
Enamelled deep tray (50mm)	1	**Telescopic Guide rails, partial Extraction**	1
Insert gird	1		

Electrical Connection

Voltage	220-240 V	**Nominal power**	3000 W
Plug	Not present	**Frequency (Hz)**	50/60 Hz
Current	13 A	**Power supply cable length**	150 cm

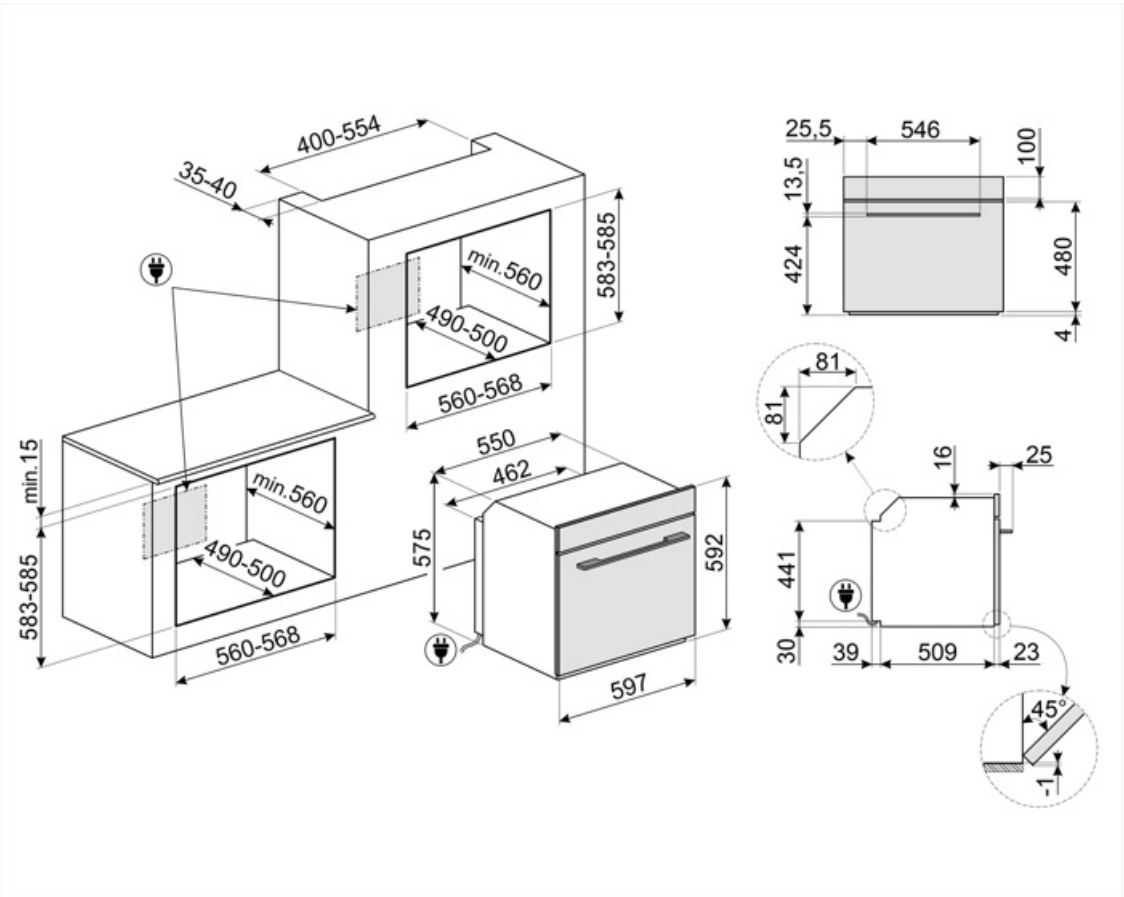

Compatible Accessories



AIRFRY2

Air fryer tray. Ideal for recreating traditional frying in the oven, but with fewer calories and less fat. It allows you to cook quickly and simply dishes such as French fries, fried vegetables and fish, ensuring perfect browning and crispiness.



ET20

Enamelled tray suitable for 45 cm and 60 cm ovens. Depth 20 mm. Perfect for a wide range of savoury and sweet baking.



GTP2

Partially extractable telescopic guides (1 level), suitable for traditional ovens. Made in stainless steel, they guarantee stability and facilitate the smooth extraction of the trays.



PALPZ

Pizza shovel with folding handle. Dimensions L31.5 x H32.5 cm. Easy and convenient to use and store. Perfect for serving pizza, bread and savory pastries in a safe and professional way.



STONE2

Rectangular pizza stone without handles, suitable for 45cm and 60cm wide ovens. Dimensions W42 x H1.8 x D37.5cm. Ideal for cooking pizzas with the same results as a typical wood-fired oven. Can also be used for baking bread, focaccias and other recipes such as pies, flans or biscuits



BBQ

Double sided plate BBQ. Suitable for recreating succulent and crispy dishes in the oven with the typical taste of grilled cooking. The ribbed side is particularly suitable for meats and cheeses. The smooth side for fish, seafood and vegetables.



ET50

Enamelled tray suitable for 45 cm and 60 cm ovens. Depth 50 mm. Perfect for cooking and roasting meat and fish in sauces. Also ideal for experimenting with lighter and crunchy side dishes



GTT2

Totally extractable telescopic guides (1 level), suitable for traditional ovens. Made in stainless steel, they guarantee stability and facilitate the smooth extraction of the trays.



PR3845X

Antifingerprint stainless steel. Cover for furniture in column installation of more ovens

Alternative products



SO6102M2G

Neptune Grey

Symbols glossary



Child lock: some models are fitted with a device to lock the programme/cycle so it cannot be accidentally changed.



Combination microwave: This oven allows to combine two different ways of cooking (Traditional with microwaves). Combined ovens increase cooking opportunities,while providing maximum flexibility of household appliances.



Defrost by time: Manual defrost function. At the end of the set duration, the function stops.



Quadruple glazed: Number of glazed doors.



Automatic lighting deactivation: For greater energy savings, the lighting turns off automatically after one minute from the start of cooking. The option can be disabled via the settings menu. In this case the light will remain on for the entire duration of cooking.



Electric



Ever Clean Enamel: Ever Clean enamel is applied electrostatically, corner to corner and edge to edge to prevent cracking or cracks over time. It is a particular pyrolytic enamel, resistant to acids which, in addition to being pleasantly bright, promotes greater cleaning of the oven walls, thanks to its lower porosity. It is baked at over 850 °C and slowly polymerized at a scientifically determined rate to ensure uniform depth and strength. Ever Clean enamel creates an impeccable finish both on the inside of the oven and on the trays, making the surfaces of the oven incredibly easy to maintain over time as it reduces the adhesion of fat during cooking.



Fresh Touch: Most of Smeg ovens have a "cool door." Thanks to the combination of tangential cooling and internal heat-reflecting glasses, the temperature on the outer surface of the door is maintained below 50° C. In addition to providing safety, this system protects the sides of the furniture from overheating by the oven.



Fan assisted: Intense and homogeneous traditional cooking, also suitable for complex recipes. The fan is active and the heat comes from below and from above at the same time. Ventilated cooking ensures a faster and more homogeneous result, leaving fragrant foods outside and moister inside. Ideal for baked pasta, biscuits, roasts and cobblers.



Static: Traditional cooking suitable for the preparation of one dish at a time. The fan is not active and the heat comes from below and from above at the same time. Static cooking is slower and more delicate, ideal in order to get well cooked and dry dishes even inside. Ideal for cooking all types of roasts, fatty meats, bread, filled cakes.



Base: the heat comes only from the bottom of the cavity. The fan is not active. Ideal for sweet and savory pies, cobblers and pizzas. Designed to complete cooking and make food more crunchy. This symbol in gas ovens indicates the gas burner.



Circulaire: it is the perfect function for cooking all types of dishes in a more delicate way. The heat comes from the back of the oven and is distributed quickly and evenly. The fan is active. It is also ideal for cooking on multiple levels without mixing smells and flavors.



ECO: low energy consumption cooking: this function is particularly suitable for cooking on a single shelf with low energy consumption. It is recommended for all types of food except those that can generate a lot of moisture (for example vegetables). To achieve maximum energy savings and reduce time, it is recommended to put the food in the oven without preheating the cooking compartment.



Grill: Very intense heat coming only from above from a double heating element. The fan is not active. Provides excellent grilling and gratinating results. Used at the end of cooking, it gives a uniform browning to dishes.

Microwave: Penetrating straight into the food, microwaves cook very quickly and with considerable energy savings. Suitable for cooking without fat, they are also able to thaw and heat food without altering its original appearance and aroma. The microwave function can also be combined with conventional functions with all the resulting advantages. Ideal for all types of food.

Microwave + grill element: The use of the grill results in a perfect browning of the surface of the food. The action of microwaves allows instead of cooking in a short time the internal part of the food.

Pizza function: Specific function for cooking pizza in a pan. It allows to obtain a pizza that is soft inside and crispy outside with the topping perfectly cooked, not dry and not burnt.

KEEP WARM

Air at 40°C provides the perfect environment for proving yeast type dough mixes. Simply select the function and place dough in the cavity for allotted

SABBATH: function that allows to cook food respecting Judaism's day of rest provisions.

Soft close: all models are equipped with advanced function of smooth closing of the door, which allows the device to close smoothly and quietly.

Electronic control: Allows you to maintain temperature inside the oven with the precision 2-3 ° C. This enables to cook meals that are very sensitive to temperature changes, such as cakes, souffles, puddings.

Vapor Clean: a simple cleaning function using steam to loosen deposits in the oven cavity.

The capacity indicates the amount of usable space in the oven cavity in litres.

Active and controlled microwave distribution. The Microwave Stirrer fan distributes the waves evenly within the oven, reducing the need for a turntable.

Cooking with the simultaneous use of the heating element in combination with fan and microwave supply.

Fan combined with traditional cooking, where heat is generated from above and below, provides uniform heat. Adding the microwave function allows the same cooking results in less time.

All glass inner door: All glass inner door, a single flat surface which is simple to keep clean.

Side lights: Two opposing side lights increase visibility inside the oven.

Rapid preheating: cooking is preceded by the preheating phase which allows the cooking compartment to reach the set temperature. This option reduces the time by up to 50%.

The oven cavity has 5 different cooking levels.

Telescopic rails: allow you to pull out the dish and check it without having to remove it from the oven entirely.

Touch controls: Easy to use touch controls allow the appliance to be programmed at the touch of a button.

The capacity indicates the amount of usable space in the oven cavity in litres.

The new EVOscreen display is enhanced with new, optimised colour graphics: 5 touch buttons control functions and parameters in an extremely simple way.

The inverter technology allows to generate microwaves continuously and at the desired power. The constant flow, without on and off cycles, allows you to precisely control the temperature, reduce times, avoids wasting energy and allows you to obtain excellent cooking, defrosting and re-heating results, thanks to the smaller difference between core and surface temperature in food.



Dedicated cooking function for the double sided plate BBQ. Suitable for recreating succulent and crispy dishes in the oven with the typical taste of grilled cooking. The ribbed side is particularly suitable for meats and cheeses; the smooth side for fish, seafood and vegetables.



Dedicated cooking function for the rectangular refractory stone PPR2 Dimensions Ideal for cooking pizzas with the same results as a typical wood-fired oven. Can also be used for baking bread, focaccias and other recipes such as pies, flans or biscuits



Function to melt butter and chocolate without using the bain-marie



Function for the preparation of popcorn packaged in bags



Dedicated cooking function for the Air fryer rack AIRFRY . Ideal for recreating traditional frying in the oven, but with fewer calories and less fat. It allows you to cook quickly and simply dishes such as French fries, fried vegetables and fish, ensuring perfect browning and crispiness.



The double chimney technology create a special airflow inside the cavity that reduce the consensation inside the cavity during microwave cooking, where the cavity is cold and the food is warm



Function to soften butter and cheese It is useful for quickly bringing frozen desserts to serving temperature The function can also be used to soften ice cream