SO6204APB



Categorie	60 cm
Familie	Oven
Vitality system	Ja
Voeding	Elektrisch
Bereidingswijze	Multitech
Technologie	Omnichef
Reinigingssysteem	Vapor Clean
EAN-code	8017709365639

Design

Esthetiek	Musa	**Kleur serigrafie**	Grijs
Kleur	Zwart	**Type zeefdruk**	Symbolen
Afwerking	Glanzend	**Deur**	Geheel glas
Design	Plat	**Handgreep**	Musa
Materiaal	Glas	**Kleur handgreep**	Zwart
Type glas	Zwart	**Logo**	Geëtst

Bediening

Naam display	VivoScreen	**Aantal weergaven talen**	20
Display technologie	TFT	**Weergave taal**	Italiano, English (UK), Français (FR), Français (CA), Nederlands, Español (ES), Español (MX), Português (PT), Svenska, Русский, Deutsch (DE), Dansk, Norsk, Polski, English (AU), Suomi, Ukrainian, Kazakh, Afrikaans (ZA), Zulu (ZA)
Regeling bediening	Advanced full touch		

Programma's / functies

Aantal kookfuncties	26
Automatische programma's	150
Vochtigheidsniveaus	3 + manual
Personaliseerbare recepten	10

Traditionele kookfuncties

- Statisch
- Geventileerd
- Circulaire
- Turbohitte
- ECO
- Grote vlak-grill
- Fan grill (large)
- Base
- Circulaire + bottom
- Pizza

Functies met stoompulsen

- Geventileerd
- Circolaire
- Circulaire + Bottom
- Turbo
- Fan Grill

Kookfuncties met stoom

- Stoom
- Geventileerd
- Hetelucht multifunctioneel
- Circulaire + bottom
- Sous Vide

Andere Stoom-functies

- Reiniging reservoir
- Waterafvoer
- Watertoevoer
- Ontkalking

Bereidingsfuncties met microgolven

- Magnetron
- Geventileerd
- Circulaire
- Magnetron met grill
- Oven met magnetronfunctie

Bereidingsfuncties met microgolven

- Multitech
- Twintech

Overige functies

- Ontdooien op tijd
- Ontdooien op gewicht
- Rijsfunctie
- Stone cooking
- BBQ
- Air-Fry
- Warmhoudfunctie
- Bordenwarmfunctie
- Sabbath

Schoonmaak functie

- Vapor Clean

Opties



Opties tijdprogrammering	Automatische in- en uitschakeling
Timer	Ja
Timer	2
Kinderbeveiliging	Ja
Overige opties	Warmhoudfunctie, ECO-Light, Taalinstelling, Weergave digitale klok, Helderheid, Tonen, Tones volume
Koken met kerntemperatuurmeter	Ja
Bakken in fases	Ja, tot 2 stappen
Smart cooking	Ja
Same Time cooking	Ja
DeltaT cooking	Ja
Showroom demo optie	Ja
Begeleide demo functie	Ja
Snelgids	Ja
Geheugen	Ja, de 10 laatst gebruikte functies
Snelle voorverwarming	Ja
Instant GO	Ja

Technische specificaties



Inhoud (l)	68 l
Cavity	QS-Galileo
Minimum temperatuur	25 °C
Maximum temperatuur	250 °C
Aantal kookniveaus	5
Dubbele ventilator	1
Aantal lampen	2
Soort verlichting	multilevel LED
Vermogen lamp	5 W
Automatische inschakeling verlichting bij openen deur	Ja
Onderwarmte - vermogen	1200 W
Bovenwarmte - vermogen	1000 W
Grill - vermogen	1700 W
Grote vlakgrill - vermogen	2700 W
Circulatie - vermogen	2000 W
Automatische uitschakeling verhittingselementen bij openen deur	Ja
Deur openen	Standaard opening
Deur	Koud
Volledig glazen binnendeur	Ja
Totaal aantal ruiten	4
Soft Close systeem	Ja
Soft open & close scharnieren	Ja
Inverter technologie	Ja
Stirrer	Ja
Chimney	Double
Koelsysteem	Centrifugal
Koelleiding	Dubbel
Reductie snelheid koelsysteem	Ja
Hoeveelheid stoom	20 - 100%
Afmetingen bruikbare interne ovenruimte (hxbxd)	353x470x397 mm
Temperatuurregeling	Elektronisch
Materiaal ovenruimte	Ever Clean emaille
Water aansluiting	Fill&Hide 2 , automatisch
Inhoud waterreservoir	2 l

Prestaties / energielabel

Netto inhoud	68 l	**Effectief magnetronvermogen**	900 W
Aantal ovens	1	**Microwave - Output power**	900 W

Meegeleverde accessoires

Ovenrooster met stop	1	**Diepe geperforeerde rvs ovenschaal (40 mm)**	1
Geëmailleerde diepe bakplaat (50mm)	1	**Telescopische geleiders, geheel uitschuifbaar**	1
Inzetrooster	1	**Kerntemperatuurmeter**	Ja, multipoint
Rvs ovenschaal	1		

Elektrische aansluiting

Spanning	220-240 V	**Nominale aansluitwaarde**	3000 W
Stekker	(F;E) Schuko	**Frequentie**	50/60 Hz
Stroom	13 A	**Lengte voedingskabel**	150 cm

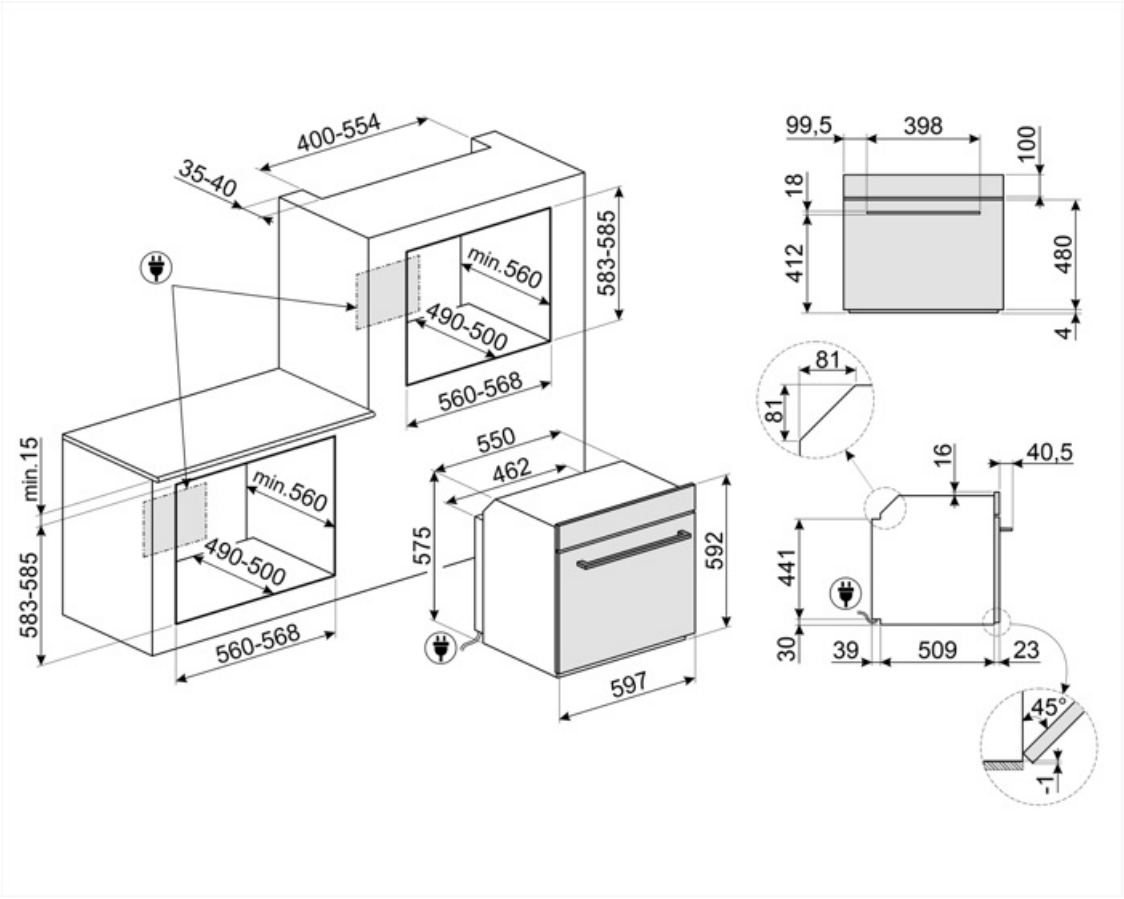

Compatibele Accessoires



AIRFRY2

Air fryer tray. Ideal for recreating traditional frying in the oven, but with fewer calories and less fat. It allows you to cook quickly and simply dishes such as French fries, fried vegetables and fish, ensuring perfect browning and crispiness.



ET20

Geëmailleerde bakplaat, 20 mm diep



GTT2

Totally extractable telescopic guides (1 level), suitable for traditional ovens. Made in stainless steel, they guarantee stability and facilitate the smooth extraction of the trays.



PALPZ

Pizzaschep met inklapbare handgreep breedte: 315 mm lengte: 325 mm



BBQ

Dubbelzijdig



ET50

Geëmailleerde bakplaat, 50 mm diep



GTTV2

Volledig uittrekbare telescopische geleiders (1 niveau), geschikt voor stoomovens. Ze zijn gemaakt van roestvrij staal en garanderen stabiliteit en vergemakkelijken het uitnemen van de trays.



STONE2

Rectangular pizza stone without handles, suitable for 45cm and 60cm wide ovens. Dimensions W42 x H1.8 x D37.5cm. Ideal for cooking pizzas with the same results as a typical wood-fired oven. Can also be used for baking bread, focaccias and other recipes such as pies, flans or biscuits

Symbols glossary



Dedicated cooking function for the double sided plate BBQ. Suitable for recreating succulent and crispy dishes in the oven with the typical taste of grilled cooking. The ribbed side is particularly suitable for meats and cheeses; the smooth side for fish, seafood and vegetables.



Kinderslot: sommige modellen zijn voorzien van een apparaat om het programma / de cyclus te vergrendelen zodat het niet kan per ongeluk veranderd



Ontdooien op gewicht: Met deze functie wordt de ontdooitijd bepaald



Viervoudige beglazing: aantal glazen deuren.



Electric



Fresh Touch: Most of Smeg ovens have a "cool door." Thanks to the combination of tangential cooling and internal heat-reflecting glasses, the temperature on the outer surface of the door is maintained below 50° C. In addition to providing safety, this system protects the sides of the furniture from overheating by the oven.



De ovenruimte wordt tegelijk door het onder- en bovenelement verwarmt. De hitteverdeling over het gerecht is afhankelijk van het niveau waarop men dit plaatst. Geschikt voor bakken op 1 niveau. Gerechten: alle ovenschotels, vlees, gevogelte, brood, (gevulde) taarten. Speciaal: gans en eend (bevatten veel vet).



Circulaire with lower element: The addition of the lower element adds extra heat at the base for food which requires extra cooking.



The water load system is designed to enhance the aesthetics of the oven. The loading and unloading tube can be easily removed from the oven and the water refilled at any time during the cooking cycle, without opening the door, guaranteeing an infinite duration of steam.



Ontdooien op tijd: met deze functie wordt automatisch het tijdstip van ontdooien van voedsel bepaald



Ontkalkingsfunctie: Is essentieel om overtollige kalksteenafzetting in de tank te verwijderen en de goede werking van het product mogelijk te maken. De noodzaak om deze handeling uit te voeren, wordt door het product zelf aangegeven.



Automatische verlichting gaat uit: voor meer energiebesparing schakelt de verlichting automatisch uit na één minuut na het begin van de bereiding.



Geëmailleerde binnenkant: De geëmailleerde binnenkant van alle Smeg-ovens heeft een speciale antacidumvoering die helpt om de binnenkant schoon te houden door de hoeveelheid kookvet te verminderen.



Ventilator met bovenste en onderste elementen: de elementen in combinatie met de ventilator zijn bedoeld om een meer gelijkmatige warmte te bieden, een methode die vergelijkbaar is met conventioneel koken, dus voorverwarmen is vereist. Het meest geschikt voor items die langzaam koken vereisen.



De ovenruimte wordt uitsluitend verhit door het onderelement. Voor gerechten die een hoge basistemperatuur behoeven, heeft deze bakstand weinig tot geen invloed op de korst aan de bovenzijde. Geschikt voor bakken op 1 niveau, ideaal voor deeggerechten die moeten rijzen (bijv. pizza). Bij gevulde taarten zal de deegbodem beter droog blijven.



Circulaire: it is the perfect function for cooking all types of dishes in a more delicate way. The heat comes from the back of the oven and is distributed quickly and evenly. The fan is active. It is also ideal for cooking on multiple levels without mixing smells and flavors.

ECO: low energy consumption cooking: this function is particularly suitable for cooking on a single shelf with low energy consumption. It is recommended for all types of food except those that can generate a lot of moisture (for example vegetables). To achieve maximum energy savings and reduce time, it is recommended to put the food in the oven without preheating the cooking compartment.

Ventilator met grillelement: De ventilator vermindert de felle hitte van de grill en biedt een uitstekende methode om verschillende soorten voedsel, karbonades, steaks, worstjes enz. Te grillen, waardoor het gelijkmatig bruin wordt en de warmte wordt verdeeld, zonder het voedsel uit te drogen. De bovenste twee niveaus die voor gebruik worden aanbevolen, en het onderste deel van de oven kunnen worden gebruikt om gerechten tegelijkertijd warm te houden, een uitstekende mogelijkheid bij het bereiden van een gegrild ontbijt. Halve grill (alleen middengedeelte) is ideaal voor kleine hoeveelheden voedsel.

Cooking with the simultaneous use of the heating element in combination with fan and microwave supply.

Fan combined with traditional cooking, where heat is generated from above and below, provides uniform heat. Adding the microwave function allows the same cooking results in less time.

Sous Vide Cooking: Steam function for perfect cooking of sous vide dishes. Enhances the taste of dishes and keeps their appearance and nutrients unaltered. Vacuum cooking (Sous Vide) made with the help of a steam oven is also an incredible healthy and genuine type of cooking. The Sous Vide cooking technique allows heat to be efficiently transferred from the steam to the food, avoiding the loss of flavor due to oxidation and the evaporation of nutrients and moisture during cooking. Sous Vide cooking also allows better control over the cooking of food compared to traditional methods, ensuring uniform cooking results. It also allows cooking at a lower temperature than traditional cooking.

De warmte wordt geproduceerd door het grill- en bovenelement. Verhitting over het volledige oppervlak. De thermostaat wordt, afhankelijk van het gerecht, in de regel op de maximale stand gezet. Bij een korte baktijd kan de ovendeur gesloten blijven; bij langere baktijd blijft deze gedeeltelijk geopend. Voor vleesgerechten (klein- en middelgroot), vleespennen, vis, groenten, gratineren etc.

Microwave: Penetrating straight into the food, microwaves cook very quickly and with considerable energy savings. Suitable for cooking without fat, they are also able to thaw and heat food without altering its original appearance and aroma. The microwave function can also be combined with conventional functions with all the resulting advantages. Ideal for all types of food.

Microwave + grill element: The use of the grill results in a perfect browning of the surface of the food. The action of microwaves allows instead of cooking in a short time the internal part of the food.

Pizza function: Specific function for cooking pizza in a pan. It allows to obtain a pizza that is soft inside and crispy outside with the topping perfectly cooked, not dry and not burnt.

Steam cooking: it`s a natural way of cooking for any kind of products, from vegetables to desserts, to preserve the nutritional and organoleptic properties of ingredients. Ideal for cooking without fat, to heat up food without drying. Steam is ideal for simultaneous cooking of meals that require different cooking times.



Fun assisted + Steam: intense and homogeneous cooking. The fan is active and the heat comes from below and from above at the same time. The addition of steam allows better preservation of the organoleptic properties of food and improves the internal cooking of foods, which are more crunchy and digestible. Ideal for roast veal, roast duck and for cooking whole fish.



FUN_STEAM_OTHER_WATER_IN_OUT_72dpi



Fan with grill pulsed steam: For creating a perfectly roasted meat joint. The extra moisture keeps the meat juicy and tender, whilst the heat fro



Circulaire + lower element pulsed steam: Ideal for reheating flans and quiches. This function will re-crisp the base, whilst filling will not dry out due to the additional moisture in the cooking cavity.



Turbo pulsed steam: For creating a perfectly roasted meat joint. The extra moisture keeps the meat juicy and tender, whilst the heat from the turbo function creates the caramelised flavours we know and love.



KEEP WARM



Temperature probe: with the temperature probe it is possible to perfectly cooking roasts, loins, meat of various cuts and sizes. In fact, the probe improve food cooking, thanks to the precise control of the temperature at the heart of the dish. The core temperature of the food is measured by a special sensor located inside the tip. When the instant temperature reaches the target temperature set by the user, cooking is finished



Circulaire + Steam: The addition of steam to thermoventilated cooking allows better preservation of the organoleptic properties of food. The heat comes from the back of the oven and is distributed quickly and evenly. The fan is active. It is the perfect function for cooking all types of dishes in a more delicate way. It is also ideal for cooking on multiple levels without mixing smells and flavors. Ideal for preparing roasts, chicken and baked goods such as leavened cakes and bread.



Turbo: the heat comes from 3 directions: above, below and from the back of the oven. The fan is active. It allows quick cooking, even on several shelves without mixing the aromas. Ideal for large volumes or foods that require intense cooking.



Circulaire pulsed steam: Provides extra moisture to food during cooking. Excellent for bread baking. The moisture allows the bread dough to stretch further at the beginning of cooking, creating an aerated and light textured dough. The remaining part of the cooking process allows for the signature crust to form.



Circulaire pulsed steam: Provides extra moisture to food during cooking. Excellent for bread baking. The moisture allows the bread dough to stretch further at the beginning of cooking, creating an aerated and light textured dough. The remaining part of the cooking process allows for the signature crust to form.



All glass inner door: All glass inner door, a single flat surface which is simple to keep clean.



Plate rack warming: function for heating or keeping dishes warm. Place the baking tray on the lowest shelf and stack the dishes to be heated.



Air at 40°C provides the perfect environment for proving yeast type dough mixes. Simply select the function and place dough in the cavity for allotted

Rapid preheating: cooking is preceded by the preheating phase which allows the cooking compartment to reach the set temperature. This option reduces the time by up to 50%.

Option designed to solve any doubts More than 100 pop-ups, which can be triggered with a long touch on any icon, provide information on the use of the display and cooking.

Smart Cooking is the perfect recipe for every occasion. Meat, fish, pasta, desserts, etc . up to 150 automatic recipes that allow to make any preparation in a single click. Decide your menu and then the oven takes care of the rest.

To guarantee the optimal functioning of the appliance, it is suggested to carry out the tank cleaning roughly once every 2-3 months.

Electronic control: Allows you to maintain temperature inside the oven with the precision 2-3 ° C. This enables to cook meals that are very sensitive to temperature changes, such as cakes, souffles, puddings.

Keep warm: the function allows to keep cooked food warm.

Only with Galileo Multi Cooking technology is it possible to combine up to three different technologies and take the best out of them: steam, microwave, convection cooking. Ovens of this generation can use any of these cooking methods individually or can combine them as desired. Both following a horizontal cooking approach (multistep) in which the various cooking techniques are arranged in sequence, and a vertical approach (multitech) in which there is a totally free combination of the three of them at the same time. Steam is healthy, microwaves are fast and traditional cooking is crispy. The oven knows how to dose them and use them wisely to guarantee innovative results with a time saving up to 70% comparing to traditional cooking.

Vapor Clean: a simple cleaning function using steam to loosen deposits in the oven cavity.

The capacity indicates the amount of usable space in the oven cavity in litres.

SABBATH: function that allows to cook food respecting Judaism's day of rest provisions.

The oven cavity has 5 different cooking levels.

Soft close: all models are equipped with advanced function of smooth closing of the door, which allows the device to close smoothly and quietly.

Telescopic rails: allow you to pull out the dish and check it without having to remove it from the oven entirely.

The 4.3" VIVOscreen display offers an advanced colour touch interface, for automatic management of firing programmes such as Delta T, Multi-step and SameTime firing.

INSTANT GO: activating this option allow to start cooking immediately. Preheating is included in the cooking time and the oven will gradually reach the desired temperature Particularly suitable for frozen foods.

The double chimney technology create a special airflow inside the cavity that reduce the consensation inside the cavity during microwave cooking, where the cavity is cold and the food is warm

The capacity indicates the amount of usable space in the oven cavity in litres.

Active and controlled microwave distribution. The Microwave Stirrer fan distributes the waves evenly within the oven, reducing the need for a turntable.

The multi-point temperature probe has three detection points. This means that not only the core temperature is detected, but also the temperature in other areas. The oven will process all these data to avoid cooking unevenness. In this way each product can be cooked in a professional, restaurant style.

The latest generation of LED lights, positioned over the entire height of the cavity, guarantee perfect multi-level visibility. No matter how many trays you put in the oven, the food inside will always be clearly visible and you can check the progress of the cooking process. In addition to the guaranteed efficiency, the LED lights also have a modern look and low energy consumption, saving up to 80% of costs and lasting 25 times longer than traditional halogen bulbs.

The perfect way to have a complete menu in a few simple steps with a considerable saving of time. The large cavity can accommodate multiple types of food at the same time, which can be cooked without any exchange of odors. The carefully studied thermodynamic flows ensure uniform cooking at every level. The SameTime algorithm calculates the times, the cooking functions and all the parameters so that 3 foods can be ready at the same time.

The inverter technology allows to generate microwaves continuously and at the desired power. The constant flow, without on and off cycles, allows you to precisely control the temperature, reduce times, avoids wasting energy and allows you to obtain excellent cooking, defrosting and re-heating results, thanks to the smaller difference between core and surface temperature in food.

Speciale kookfunctie voor het Airfryerrek AIRFRY. Ideaal voor het nabootsen van traditioneel frituren in de oven, maar met minder calorieën en minder vet. Hiermee kook je snel en eenvoudig gerechten zoals frites, gebakken groenten en vis, waardoor ze perfect bruin en krokant worden.

Dedicated cooking function for the rectangular refractory stone PPR2 Dimensions Ideal for cooking pizzas with the same results as a typical wood-fired oven. Can also be used for baking bread, focaccias and other recipes such as pies, flans or biscuits

DeltaT cooking The oven automatically sets the cavity temperature to a predefined temperature (named deltaT) higher than the core temperature detected by the probe. When the probe detects an extra degree at the core, the oven automatically increases also its internal temperature by one degree. The oven offers the possibility to choose between three different deltaT cooking modes (slow, medium and fast) and to set any desired core temperature. A concentration of technology that makes it possible to obtain tender, juicy, healthy products of the highest quality.