SO6301TX



Category	60cm Single Ovens
Product Family	Oven
Power supply	Electric
Heat source	Electric
Cooking method	Thermo-ventilated
Galileo cavity	Traditional
Cleaning system	Vapor Clean
EAN code	8017709321116

Aesthetics

Aesthetics	Classic	**Serigraphy type**	Symbols
Colour	Stainless steel	**Door**	Full glass
Finishing	Fingerproof	**Handle**	Classic
Design	Flat	**Handle Colour**	Steel effect
Material	Stainless steel	**Logo**	Embossed
Glass Type	Eclipse	**Control knobs**	Classic
Serigraphy colour	Black		

Controls

Display name	CompactScreen	**Control setting**	Control knobs
Display technology	LCD	**No. of controls**	2

Programs / Functions

No. of cooking functions	10

Traditional cooking functions

Static

Fan assisted

Ciculaire

Turbo (circulaire + bottom + upper + fan)

ECO

Large grill

Fan grill (large)

Base

Circulaire + bottom

Pizza

Other functions

Defrost by time

Proving

Sabbath

Cleaning functions

Vapor Clean

Options

Time-setting options	Delay start and automatic end cooking	**Other options**	Keep warm
Minute minder	Yes	**Showroom demo option**	Yes
Timer	1	**Rapid pre-heating**	Yes
Controls Lock / Child Safety	Yes		

Technical Features

Capacity (Lt)	68 l	**Heating suspended when door is opened**	Yes
Cavity	QS-Galileo	**Door opening type**	Standard opening
Minimum Temperature	30 °C	**Door**	Temperate door
Maximum temperature	280 °C	**Removable door**	Yes
Shelf positions	5	**Full glass inner door**	Yes
No. of lights	1	**Removable inner door**	Yes
Light type	Halogen	**Total no. of door glasses**	3
User-replaceable light	Yes	**Chimney**	Fixed
Light power	40 W		

Light when door is opened	Yes	**Cooling system**	Tangential
Lower heating element power	1200 W	**Cooling duct**	Single
Grill element - power	1800 W	**Usable cavity space dimensions (HxWxD)**	353x470x401 mm
Circular heating element - Power	2000 W	**Temperature control**	Electronic
		Cavity material	Easy clean enamel

Performance / Energy Label



Energy efficiency class	A+	**Energy consumption in forced air convection**	2.45 MJ
Net volume of the cavity	68 litres	**Energy consumption per cycle in fan-forced convection**	0.68 kWh
Energy consumption per cycle in conventional mode	1.15 kWh	**Number of cavities**	1
Energy consumption in conventional mode	4.14 MJ	**Energy efficiency index**	81 %

Accessories Included

Chrome shelf with back and side stop	1	**Grill mesh**	1
Enamelled deep tray (50mm)	1		

Electrical Connection

Voltage	220-240 V	**Nominal power (W)**	3000 W
Plug	No	**Frequency (Hz)**	50/60 Hz
Current	13 A	**Power supply cable length**	150 cm

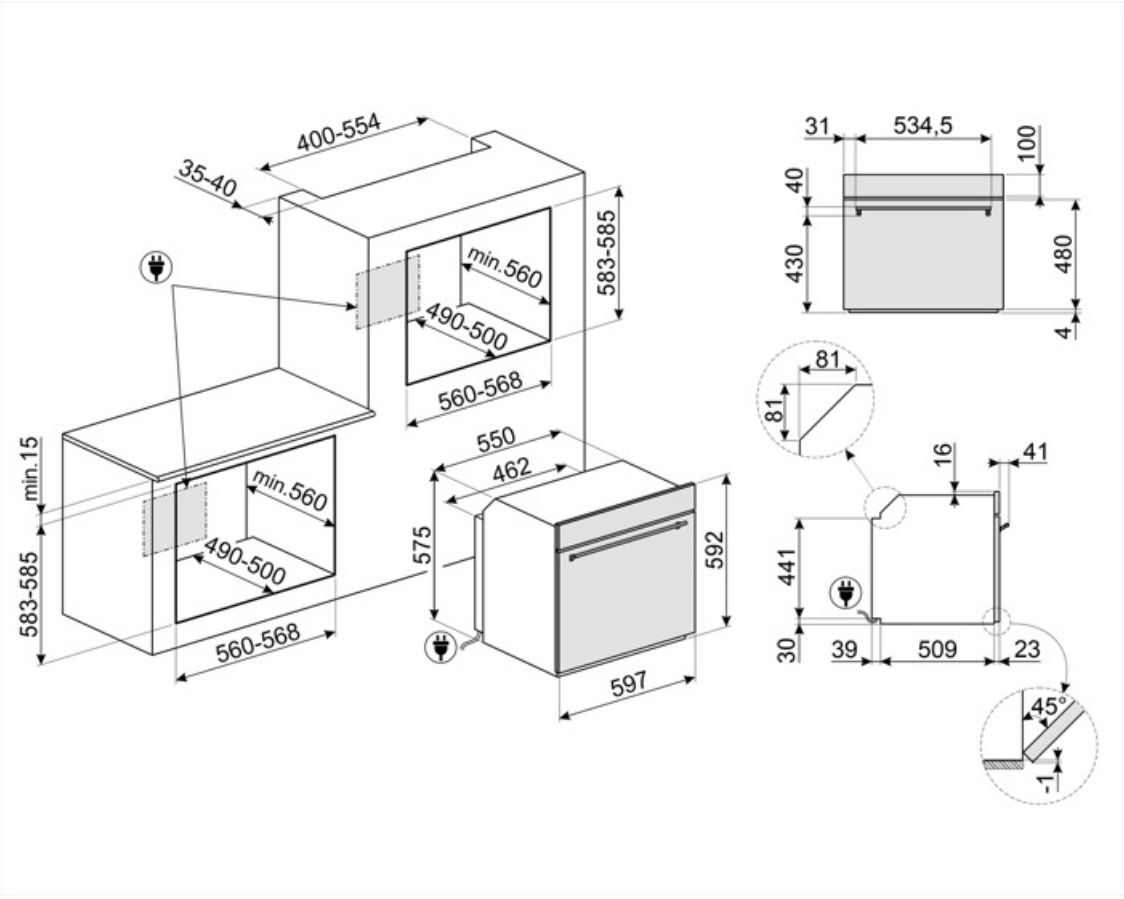
400-554
35-40
583-585
min.560
490-500
560-568
min.15
583-585
min.560
490-500
560-568
550
462
575
592
597
31
534,5
100
40
430
480
4
81
81
16
41
441
30
39
509
23
45°
1

Compatible Accessories



AIRFRY2

Air fryer tray. Ideal for recreating traditional frying in the oven, but with fewer calories and less fat. It allows you to cook quickly and simply dishes such as French fries, fried vegetables and fish, ensuring perfect browning and crispiness.



BNP608T

Teflon-coated tray, 8mm depth, to be placed on the grid



ET50

Enamelled tray, 50mm deep



PALPZ

Pizza shovel with fold away handle width: 315mm length : 325mm



BBQ

Double sided plate BBQ. Suitable for recreating succulent and crispy dishes in the oven with the typical taste of grilled cooking. The ribbed side is particularly suitable for meats and cheeses. The smooth side for fish, seafood and vegetables.



ET20

Enamelled tray, 20mm deep



GTT2

Totally extractable telescopic guides (1 level), suitable for traditional ovens. Made in stainless steel, they guarantee stability and facilitate the smooth extraction of the trays.



STONE2

Rectangular pizza stone without handles, suitable for 45cm and 60cm wide ovens. Dimensions W42 x H1.8 x D37.5cm. Ideal for cooking pizzas with the same results as a typical wood-fired oven. Can also be used for baking bread, focaccias and other recipes such as pies, flans or biscuits

Symbols glossary



Child lock: some models are fitted with a device to lock the programme/cycle so it cannot be accidentally changed.



Air cooling system: to ensure a safe surface temperatures.



Triple glazed doors: Number of glazed doors.



Enamel interior: The enamel interior of all Smeg ovens have a special antacid lining which helps keep the interior clean by reducing the amount of cooking grease adhering to it.



Upper and lower element only: a traditional cooking method best suited for single items located in the centre of the oven. the top pf the oven will always be hottest. Ideal for roast, fruit cakes, bread etc.



Circulaire with lower element: The addition of the lower element adds extra heat at the base for food which requires extra cooking.



ECO: The combination of the grill, fan and lower element is particularly suitable for cooking small quantities of food.



Fan with grill element: The fan reduces the fierce heat from the grill, providing an excellent method of grilling various foods, chops, steaks, sausages etc. giving even browning and heat distribution, without drying out the food. The top two levels recommended for use, and the lower part of the oven can be used to keep items warm at the same time, an excellent facility when cooking a grilled breakfast. Half grill (centre portion only) is ideal for small quantities of food.



Circulaire with upper and lower elements: The use of the fan with both elements allows food to be cooked quickly and effectively, ideal for large joints that require thorough cooking. It offers a similar result to rotisserie, moving the heat around the food, instead of moving the food itself, enabling any size or shape to be cooked.



A+: Energy efficiency class A+ helps to save up to 10% energy compared to class A. Maximum performance with minimum consumption is guaranteed.



Defrost by time: with this function the time of thawing of foods are determined automatically.



Electric



Fan with upper and lower elements: The elements combined with the fan aim to provide more uniform heat, a similar method to conventional cooking, so pre-heat is required. Most suitable for items requiring slow cooking methods.



Lower heating element only: This function is ideal for foods that require extra base temperature without browning, e.g. pastry dishes, pizza. Also suitable for slow cooking of stews and casseroles.



Circulaire: The combination of the fan and circular element around it gives a hot air cooking method. This provides many benefits including no preheat if cook time is more than 20 minutes, no flavour transfer when cooking different foods at the same time, less energy, and shorter cook times. Good for all types of food.



Grill element: Using of grill gives excellent results when cooking meat of medium and small portions, especially when combined with a rotisserie (where possible). Also ideal for cooking sausages and bacon.



Pizza function: The simultaneous operation of three elements ensures an optimum cooking facility when used with the Smeg pizza stone.



All glass inner door: All glass inner door, a single flat surface which is simple to keep clean.

The inner door glass: can be removed with a few quick movements for cleaning.

Side lights: Two opposing side lights increase visibility inside the oven.

Rapid preheat: The rapid preheat function can be used to reach the selected temperature in just a few minutes.

The oven cavity has 5 different cooking levels.

Vapor Clean: a simple cleaning function using steam to loosen deposits in the oven cavity.

With a simple and intuitive interface, the COMPACTscreen provides a pleasant user experience, thanks to the interaction with the knobs.

Keep warm: This function allows you to keep precooked foods warm.

Air at 40°C provides the perfect environment for proving yeast type dough mixes. Simply select the function and place dough in the cavity for allotted

Sabbath: This function allows you to cook food whilst respecting the provisions of the Jewish day of rest.

Electronic control: Allows you to maintain temperature inside the oven with the precision 2-3 ° C. This enables to cook meals that are very sensitive to temperature changes, such as cakes, souffles, puddings.

The capacity indicates the amount of usable space in the oven cavity in litres.

The capacity indicates the amount of usable space in the oven cavity in litres.