SO6302TX



Category	60 cm
Product Family	Oven
Power supply	Electric
Heat source	ELECTRICITY
Cooking method	Thermo-ventilated
Galileo platform	Traditional
Cleaning system	Vapor Clean
EAN code	8017709294663

Aesthetics

Aesthetic	Classica	**Serigraphy type**	Symbols
Colour	Stainless Steel	**Door**	With 2 horizontal strips
Finishing	Fingerproof	**Handle**	Classic
Design	Flat	**Handle Colour**	Steel effect
Material	Stainless steel	**Logo**	Embossed
Glass Type	Eclipse	**Control knobs**	Classic
Serigraphy colour	Black	**Controls colour**	Steel effect

Controls

Display name	EvoScreen	**Control setting**	Knobs & touch buttons
Display technology	LCD	**No. of controls**	2

Programs / Functions main oven

No. of cooking functions	10

Traditional cooking functions

- Static
- Fan assisted
- Circulaire
- Turbo
- Eco
- Large grill
- Fan grill (large)
- Base
- Circulaire + bottom
- Pizza

Other functions

- Defrost by time
- Leavening
- Stone cooking
- BBQ
- Air-Fry
- Sabbath

Cleaning functions

- Vapor Clean

Options

Time-setting options	Delay start and automatic end cooking	**Other options**	Keep warm, Eco light, Brightness, Tones
Minute minder	Yes	**Showroom demo option**	Yes
Timer	1	**Rapid pre-heating**	Yes
Controls Lock / Child Safety	Yes		

Technical Features

Capacity (Lt)	68 l	**Door opening type**	Standard opening
Cavity	QS-Galileo	**Door**	Cool
Minimum Temperature	25 °C	**Removable door**	Yes
Maximum temperature	280 °C	**Full glass inner door**	Yes
No. of shelves	5	**Removable inner door**	Yes
N. of fans	1	**Total no. of door glasses**	3
No. of lights	2	**Soft Close hinges**	Yes
Light type	Halogen	**Soft Open**	Yes
User-replaceable light	Yes	**Chimney**	Fixed
Light Power	40 W	**Cooling system**	Tangential
Light when door is opened	Yes	**Cooling duct**	Single
Lower heating element power	1200 W	**Usable cavity space dimensions (HxWxD)**	353x470x401 mm
Grill element - power	1750 W	**Temperature control**	Electronic

Circular heating element - Power	2000 W	**Cavity material**	Ever clean Enamel
Heating suspended when door is opened	Yes		

Performance / Energy Label



Energy efficiency class	A+	**Energy consumption in forced air convection**	2,45 MJ
Net volume of the cavity	68 l	**Energy consumption per cycle in fan-forced convection**	0,68 kWh
Energy consumption per cycle in conventional mode	1,15 kWh	**Number of cavities**	1
Energy consumption in conventional mode	4,14 MJ	**Energy efficiency index**	81 %

Accessories included



Rack with back stop	1	**Insert gird**	1
Enamelled tray (20mm)	1	**Telescopic Guide rails, partial Extraction**	1
Enamelled deep tray (50mm)	1		

Electrical Connection

Voltage	220-240 V	**Nominal power**	3000 W
Plug	Not present	**Frequency (Hz)**	50/60 Hz
Current	13 A	**Power supply cable length**	150 cm

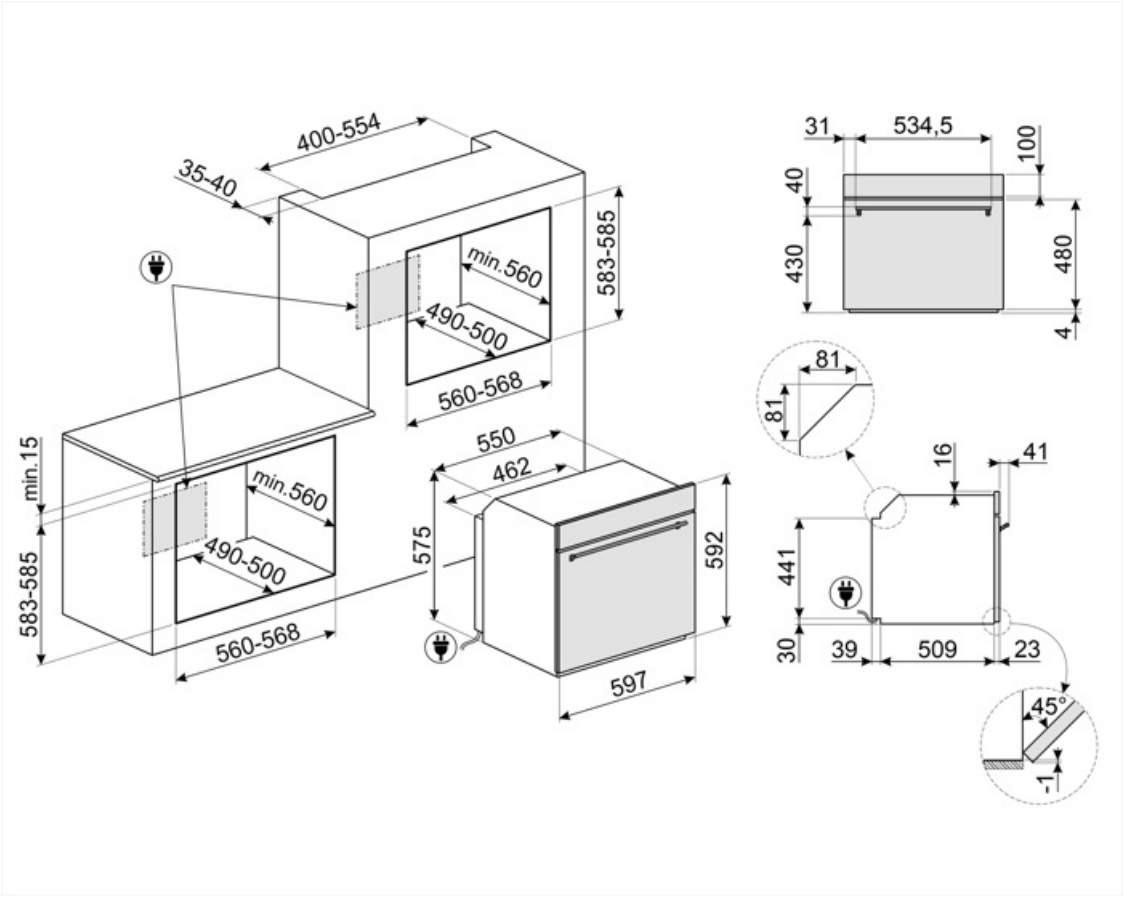
400-554
35-40
583-585
min.560
490-500
560-568
min.15
583-585
min.560
490-500
560-568
550
462
575
592
597
31
534,5
100
40
430
480
4
81
81
16
41
441
30
39
509
23
45°
1

Compatible Accessories



AIRFRY2

Air fryer tray. Ideal for recreating traditional frying in the oven, but with fewer calories and less fat. It allows you to cook quickly and simply dishes such as French fries, fried vegetables and fish, ensuring perfect browning and crispiness.



ET20

Enamelled tray suitable for 45 cm and 60 cm ovens. Depth 20 mm. Perfect for a wide range of savoury and sweet baking.



GTP2

Partially extractable telescopic guides (1 level), suitable for traditional ovens. Made in stainless steel, they guarantee stability and facilitate the smooth extraction of the trays.



PALPZ

Pizza shovel with folding handle. Dimensions L31.5 x H32.5 cm. Easy and convenient to use and store. Perfect for serving pizza, bread and savory pastries in a safe and professional way.



STONE2

Rectangular pizza stone without handles, suitable for 45cm and 60cm wide ovens. Dimensions W42 x H1.8 x D37.5cm. Ideal for cooking pizzas with the same results as a typical wood-fired oven. Can also be used for baking bread, focaccias and other recipes such as pies, flans or biscuits



BBQ

Double sided plate BBQ. Suitable for recreating succulent and crispy dishes in the oven with the typical taste of grilled cooking. The ribbed side is particularly suitable for meats and cheeses. The smooth side for fish, seafood and vegetables.



ET50

Enamelled tray suitable for 45 cm and 60 cm ovens. Depth 50 mm. Perfect for cooking and roasting meat and fish in sauces. Also ideal for experimenting with lighter and crunchy side dishes



GTT2

Totally extractable telescopic guides (1 level), suitable for traditional ovens. Made in stainless steel, they guarantee stability and facilitate the smooth extraction of the trays.



PR3845X

Antifingerprint stainless steel. Cover for furniture in column installation of more ovens

Symbols glossary



Dedicated cooking function for the double sided plate BBQ. Suitable for recreating succulent and crispy dishes in the oven with the typical taste of grilled cooking. The ribbed side is particularly suitable for meats and cheeses; the smooth side for fish, seafood and vegetables.



A+: Energy efficiency class A+ helps to save up to 10% energy compared to class A. Maximum performance with minimum consumption is guaranteed.



Defrost by time: Manual defrost function. At the end of the set duration, the function stops.



Automatic lighting deactivation: For greater energy savings, the lighting turns off automatically after one minute from the start of cooking. The option can be disabled via the settings menu. In this case the light will remain on for the entire duration of cooking.



Ever Clean Enamel: Ever Clean enamel is applied electrostatically, corner to corner and edge to edge to prevent cracking or cracks over time. It is a particular pyrolytic enamel, resistant to acids which, in addition to being pleasantly bright, promotes greater cleaning of the oven walls, thanks to its lower porosity. It is baked at over 850 °C and slowly polymerized at a scientifically determined rate to ensure uniform depth and strength. Ever Clean enamel creates an impeccable finish both on the inside of the oven and on the trays, making the surfaces of the oven incredibly easy to maintain over time as it reduces the adhesion of fat during cooking.



Fresh Touch: Most of Smeg ovens have a "cool door." Thanks to the combination of tangential cooling and internal heat-reflecting glasses, the temperature on the outer surface of the door is maintained below 50° C. In addition to providing safety, this system protects the sides of the furniture from overheating by the oven.



Static: Traditional cooking suitable for the preparation of one dish at a time. The fan is not active and the heat comes from below and from above at the same time. Static cooking is slower and more delicate, ideal in order to get well cooked and dry dishes even inside. Ideal for cooking all types of roasts, fatty meats, bread, filled cakes.



Child lock: some models are fitted with a device to lock the programme/cycle so it cannot be accidentally changed.



Air cooling system: to ensure a safe surface temperatures.



Triple glazed doors: Number of glazed doors.



Electric



Fingerprint proof stainless steel: Fingerprint proof stainless steel keeps stainless steel looking as good as new.



Fan assisted: Intense and homogeneous traditional cooking, also suitable for complex recipes. The fan is active and the heat comes from below and from above at the same time. Ventilated cooking ensures a faster and more homogeneous result, leaving fragrant foods outside and moister inside. Ideal for baked pasta, biscuits, roasts and cobblers.



Base: the heat comes only from the bottom of the cavity. The fan is not active. Ideal for sweet and savory pies, cobblers and pizzas. Designed to complete cooking and make food more crunchy. This symbol in gas ovens indicates the gas burner.

Circulaire with lower element: The addition of the lower element adds extra heat at the base for food which requires extra cooking.

Circulaire: it is the perfect function for cooking all types of dishes in a more delicate way. The heat comes from the back of the oven and is distributed quickly and evenly. The fan is active. It is also ideal for cooking on multiple levels without mixing smells and flavors.

ECO: low energy consumption cooking: this function is particularly suitable for cooking on a single shelf with low energy consumption. It is recommended for all types of food except those that can generate a lot of moisture (for example vegetables). To achieve maximum energy savings and reduce time, it is recommended to put the food in the oven without preheating the cooking compartment.

Grill: Very intense heat coming only from above from a double heating element. The fan is not active. Provides excellent grilling and gratinating results. Used at the end of cooking, it gives a uniform browning to dishes.

Fan grill: very intense heat coming only from above from a double heating element. The fan is active. It allows the optimal grilling of thickest meats. Ideal for large cuts of meat.

Pizza function: Specific function for cooking pizza in a pan. It allows to obtain a pizza that is soft inside and crispy outside with the topping perfectly cooked, not dry and not burnt.

Turbo: the heat comes from 3 directions: above, below and from the back of the oven. The fan is active. It allows quick cooking, even on several shelves without mixing the aromas. Ideal for large volumes or foods that require intense cooking.

All glass inner door: All glass inner door, a single flat surface which is simple to keep clean.

The inner door glass: can be removed with a few quick movements for cleaning.

KEEP WARM

Side lights: Two opposing side lights increase visibility inside the oven.

Air at 40°C provides the perfect environment for proving yeast type dough mixes. Simply select the function and place dough in the cavity for allotted

Rapid preheating: cooking is preceded by the preheating phase which allows the cooking compartment to reach the set temperature. This option reduces the time by up to 50%.

SABBATH: function that allows to cook food respecting Judaism's day of rest provisions.

The oven cavity has 5 different cooking levels.

Soft close: all models are equipped with advanced function of smooth closing of the door, which allows the device to close smoothly and quietly.

Telescopic rails: allow you to pull out the dish and check it without having to remove it from the oven entirely.

Electronic control: Allows you to maintain temperature inside the oven with the precision 2-3 ° C. This enables to cook meals that are very sensitive to temperature changes, such as cakes, souffles, puddings.

Vapor Clean: a simple cleaning function using steam to loosen deposits in the oven cavity.

The capacity indicates the amount of usable space in the oven cavity in litres.

The new EVOscreen display is enhanced with new, optimised colour graphics: 5 touch buttons control functions and parameters in an extremely simple way.

The capacity indicates the amount of usable space in the oven cavity in litres.

Dedicated cooking function for the Air fryer rack AIRFRY . Ideal for recreating traditional frying in the oven, but with fewer calories and less fat. It allows you to cook quickly and simply dishes such as French fries, fried vegetables and fish, ensuring perfect browning and crispiness.

Dedicated cooking function for the rectangular refractory stone PPR2 Dimensions Ideal for cooking pizzas with the same results as a typical wood-fired oven. Can also be used for baking bread, focaccias and other recipes such as pies, flans or biscuits