SO6604M2PTI



Category	60cm Single Ovens
Product Family	Oven
Power supply	Electric
Cooking method	Combi Microwave
Galileo cavity	SpeedwaveXL
Cleaning system	Vapor Clean
EAN code	8017709369880

Aesthetics

Aesthetics	Dolce Stil Novo	**Material**	Glass
Colour	Black	**Glass Type**	Eclipse
Finishing	Gloss	**Door**	Full glass
Design	Flat	**Handle**	Dolce Stil Novo
Interchangeable Trims	Yes	**Handle Colour**	Black
Component finish	Titanium	**Logo**	Silk screen

Controls

Display name	VivoScreen	**No. of display languages**	20
Display technology	TFT		
Control setting	Touch control	**Display languages**	Italiano, English (UK), Français (FR), Français (CA), Nederlands, Español (ES), Español (MX), Português (PT), Svenska, Русский, Deutsch (DE), Dansk, Norsk, Polski, English (AU), Suomi, Ukrainian, Kazakh, Afrikaans (ZA), Zulu (ZA)

Programs / Functions

No. of cooking functions	20
Automatic programmes	150
Customisable recipes	10

Traditional cooking functions

- Static
- Fan assisted
- Ciculaire
- Turbo (circulaire + bottom + upper + fan)
- ECO
- Large grill
- Fan grill (large)
- Base
- Circulaire + bottom
- Pizza

Microwave functions

- Microwave
- Microwave + bottom + top + fan
- Microwave + circulaire + fan
- Microwave + grill
- Microwave + Circulaire + bottom
- Warming and re-generation

Other functions

- Defrost by time
- Defrost by weight
- Proving
- Stone cooking
- BBQ
- Air-Fry
- Melt
- Soft
- Pop-corn
- Keep warm
- Plate rack/warmer
- Sabbath

Cleaning functions

- Vapor Clean

Options

Time-setting options	Delay start and automatic end cooking	**SameTime**	Yes
Minute minder	Yes	**DeltaT cooking**	Yes
Timer	3	**Showroom demo option**	Yes
Controls Lock / Child Safety	Yes	**Demo-tutorial mode**	Yes
Other options	Keep warm, Eco light, Language setting, Digital clock display, Brightness, Eco-logic, Tones, Tones volume	**Touch guide**	Yes
		History	Yes, the last 10 functions utilised
		Rapid pre-heating	Yes
		Instant GO	Yes

Cooking with probe thermometer	Yes
Multi-step cooking	Yes, up to 2 steps
Smart cooking	Yes

Technical Features



Capacity (Lt)	68 l	**Door opening type**	Standard opening
Cavity	QS-Galileo	**Door**	Cool
Minimum Temperature	25 °C	**Full glass inner door**	Yes
Maximum temperature	250 °C	**Total no. of door glasses**	4
Shelf positions	5	**Soft Close hinges**	Yes
No. of lights	2	**Soft Open**	Yes
Light type	Halogen	**Inverter**	Yes
User-replaceable light	Yes	**Stirrer**	Yes
Light power	40 W	**Chimney**	Double
Light when door is opened	Yes	**Cooling system**	Centrifugal
		Cooling duct	Double
Lower heating element power	1200 W	**Speed Reduction Cooling System**	Yes
Upper heating element - Power	1000 W	**Usable cavity space dimensions (HxWxD)**	353x470x397 mm
Grill element - power	1700 W	**Temperature control**	Electronic
Large grill - Power	2700 W	**Cavity material**	Easy clean enamel
Circular heating element - Power	2000 W		
Heating suspended when door is opened	Yes		

Performance / Energy Label



Net volume of the cavity	68 litres	**Microwave effective power**	900 W
Number of cavities	1		

Accessories Included



Premium rack	1	**Glass tray**	1
Enamelled deep tray (50mm)	1	**Telescopic Guide rails, total Extraction**	1
Grill mesh	1	**Temperature probe**	Yes, multipoint

Electrical Connection

Voltage	220-240 V	**Nominal power (W)**	3000 W
Plug	Cable with free ends	**Frequency (Hz)**	50/60 Hz

Current	13 A	**Power supply cable length**	150 cm

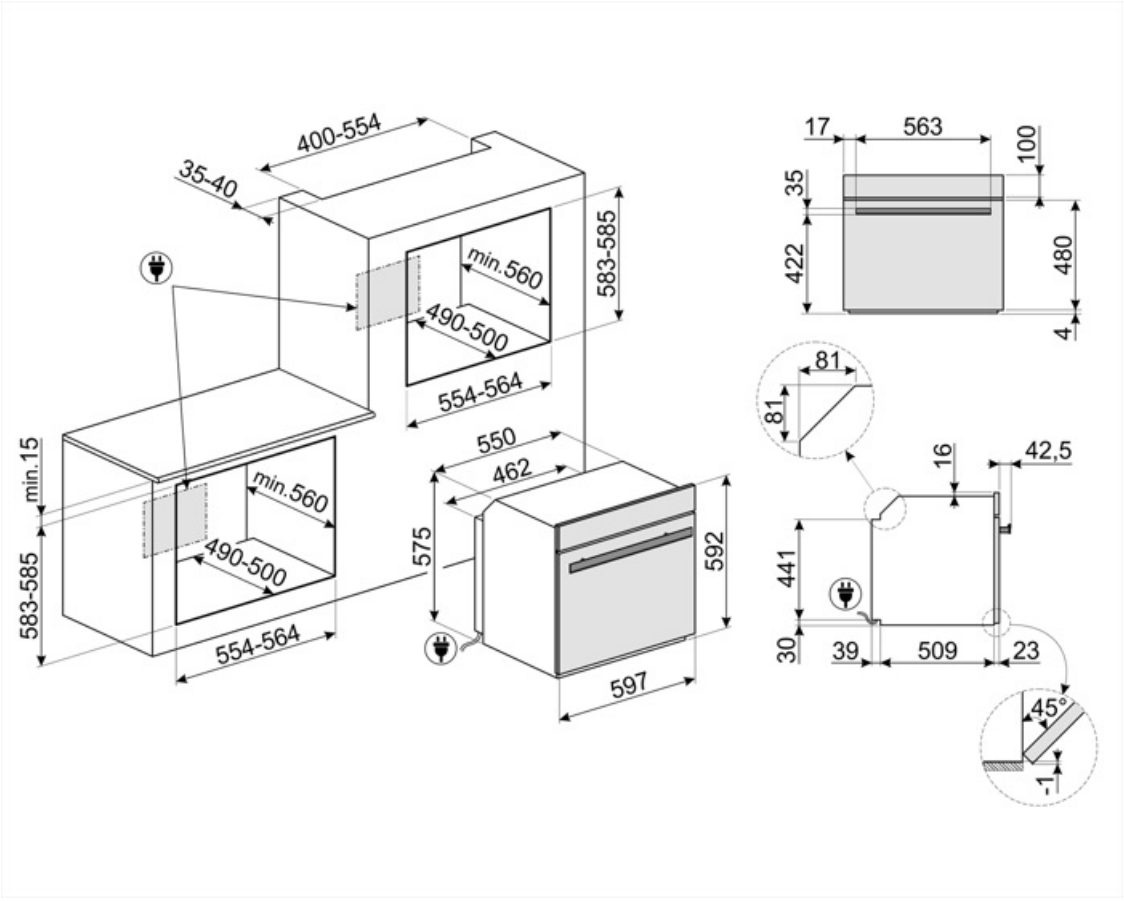

Compatible Accessories



BBQ

Double sided plate BBQ. Suitable for recreating succulent and crispy dishes in the oven with the typical taste of grilled cooking. The ribbed side is particularly suitable for meats and cheeses. The smooth side for fish, seafood and vegetables.



ET50

Enamelled tray, 50mm deep



KIT663C



STONE2

Rectangular pizza stone without handles, suitable for 45cm and 60cm wide ovens. Dimensions W42 x H1.8 x D37.5cm. Ideal for cooking pizzas with the same results as a typical wood-fired oven. Can also be used for baking bread, focaccias and other recipes such as pies, flans or biscuits



ET20

Enamelled tray, 20mm deep



GTT2

Totally extractable telescopic guides (1 level), suitable for traditional ovens. Made in stainless steel, they guarantee stability and facilitate the smooth extraction of the trays.



KIT663X

Symbols glossary



Dedicated cooking function for the double sided plate BBQ. Suitable for recreating succulent and crispy dishes in the oven with the typical taste of g



Chimney: The double chimney technology creates a special airflow inside the cavity that reduce the condensation inside the cavity during microwave cooking.



Defrost by time: with this function the time of thawing of foods are determined automatically.



DeltaT cooking: The oven automatically sets the cavity temperature to a predefined temperature (named deltaT) higher than the core temperature detected by the probe. When the probe detects an extra degree at the core, the oven automatically increases also its internal temperature by one degree.



Quadruple glazed: Number of glazed doors.



ECO-logic: option allows you to restrict the power limit of the appliance real energy saving.



Enamel interior: The enamel interior of all Smeg ovens have a special antacid lining which helps keep the interior clean by reducing the amount of cooking grease adhering to it.



Fan with upper and lower elements: The elements combined with the fan aim to provide more uniform heat, a similar method to conventional cooking, so pre-heat is required. Most suitable for items requiring slow cooking methods.



Lower heating element only: This function is ideal for foods that require extra base temperature without browning, e.g. pastry dishes, pizza. Also suitable for slow cooking of stews and casseroles.



Child lock: some models are fitted with a device to lock the programme/cycle so it cannot be accidentally changed.



Combination microwave: This oven allows to combine two different ways of cooking (Traditional with microwaves). Combined ovens increase cooking opportunities,while providing maximum flexibility of household appliances.



Defrost by weight: With this function the defrosting time is determined



The 4.3" VIVOscreen display offers an advanced colour touch interface, for automatic management of firing programmes such as Delta T, Multi-step and SameTime firing.



Automatic lighting switches off: for greater energy savings, the lighting switches off automatically after one minute from the start of cooking.



Electric



Fresh Touch: Most of Smeg ovens have a "cool door." Thanks to the combination of tangential cooling and internal heat-reflecting glasses, the temperature on the outer surface of the door is maintained below 50° C. In addition to providing safety, this system protects the sides of the furniture from overheating by the oven.



Upper and lower element only: a traditional cooking method best suited for single items located in the centre of the oven. the top pf the oven will always be hottest. Ideal for roast, fruit cakes, bread etc.



Circulaire with lower element: The addition of the lower element adds extra heat at the base for food which requires extra cooking.

Circulaire: The combination of the fan and circular element around it gives a hot air cooking method. This provides many benefits including no preheat if cook time is more than 20 minutes, no flavour transfer when cooking different foods at the same time, less energy, and shorter cook times. Good for all types of food.



Grill element: Using of grill gives excellent results when cooking meat of medium and small portions, especially when combined with a rotisserie (where possible). Also ideal for cooking sausages and bacon.



Microwave: Penetrating straight into the food, microwaves cook very quickly and with considerable energy savings. Suitable for cooking without fat, they are also able to thaw and heat food without altering its original appearance and aroma. The microwave function can also be combined with conventional functions with all the resulting advantages. Ideal for all types of food.



Microwave + grill element: The use of the grill results in a perfect browning of the surface of the food. The action of microwaves allows instead of cooking in a short time the internal part of the food.



This function can reheat precooked dishes, without becoming dry or hard.



Circulaire with upper and lower elements: The use of the fan with both elements allows food to be cooked quickly and effectively, ideal for large joints that require thorough cooking. It offers a similar result to rotisserie, moving the heat around the food, instead of moving the food itself, enabling any size or shape to be cooked.



Keep warm: This function allows you to keep precooked foods warm.



Warming up: An option for dish warming and keeping the prepared meals hot.



ECO: The combination of the grill, fan and lower element is particularly suitable for cooking small quantities of food.



Fan with grill element: The fan reduces the fierce heat from the grill, providing an excellent method of grilling various foods, chops, steaks, sausages etc. giving even browning and heat distribution, without drying out the food. The top two levels recommended for use, and the lower part of the oven can be used to keep items warm at the same time, an excellent facility when cooking a grilled breakfast. Half grill (centre portion only) is ideal for small quantities of food.



Cooking with the simultaneous use of the heating element in combination with fan and microwave supply.



Fan combined with traditional cooking, where heat is generated from above and below, provides uniform heat. Adding the microwave function allows the same cooking results in less time.



Pizza function: The simultaneous operation of three elements ensures an optimum cooking facility when used with the Smeg pizza stone.



All glass inner door: All glass inner door, a single flat surface which is simple to keep clean.



Side lights: Two opposing side lights increase visibility inside the oven.



Cooking with temperature probe: It is possible to display the temperature detected by the probe and set a target temperature that the dish must reach. When the core of the dish reaches the desired temperature, cooking stops

Air at 40°C provides the perfect environment for proving yeast type dough mixes. Simply select the function and place dough in the cavity for allotted

Sabbath: This function allows you to cook food whilst respecting the provisions of the Jewish day of rest.

The oven cavity has 5 different cooking levels.

Soft close: all models are equipped with advanced function of smooth closing of the door, which allows the device to close smoothly and quietly.

Electronic control: Allows you to maintain temperature inside the oven with the precision 2-3 ° C. This enables to cook meals that are very sensitive to temperature changes, such as cakes, souffles, puddings.

Vapor Clean: a simple cleaning function using steam to loosen deposits in the oven cavity.

The capacity indicates the amount of usable space in the oven cavity in litres.

Instant go: activating this option allows cooking to start immediately. Preheating is included in the cooking time and the oven will gradually reach the desired temperature. Particularly suitable for frozen foods.

The multi-point temperature probe has three detection points. This means that not only the core temperature is detected, but also the temperature in other areas. The oven will process all these data to avoid cooking unevenness. In this way each product can be cooked in a professional, restaurant style.

The inverter technology allows to generate microwaves continuously and at the desired power The constant flow, without on and off cycles, allows you to precisely control the temperature, reduce times, avoids wasting energy and allows you to obtain excellent cooking, defrosting and re-heating results, thanks to the smaller difference between core and surface temperature in food

Rapid preheat: The rapid preheat function can be used to reach the selected temperature in just a few minutes.

Touch guide: By holding down any symbol for 3 seconds you can get information on its function

Smart Cooking System: for the perfect cooking it is simply necessary choosing the kind and the weight of food and the cooking temperature: any other setting will be established automatically.

Telescopic rails: allow you to pull out the dish and check it without having to remove it from the oven entirely.

Touch controls: Easy to use touch controls allow the appliance to be programmed at the touch of a button.

The capacity indicates the amount of usable space in the oven cavity in litres.

Keep warm: the function allows to keep cooked food warm.

Stirrer Active and controlled microwave distribution. The Microwave Stirrer fan distributes the waves evenly within the oven, reducing the need for a turntable.

Sametime: The perfect way to have a complete menu in a few simple steps. The SameTime algorithm calculates the times, the cooking functions and all the parameters so that 3 foods can be ready at the same time.

Dedicated cooking function for the Air fryer rack AIRFRY . Ideal for recreating traditional frying in the oven, but with fewer calories and less fat.



Dedicated cooking function for the rectangular refractory stone PPR2 Dimensions Ideal for cooking pizzas with the same results as a typical wood-fire



Function to melt butter and chocolate without using the bain-marie



Function to soften butter and cheese It is useful for quickly bringing frozen desserts to serving temperature The function can also be used to soften ice cream



Function for the preparation of popcorn packaged in bags