SO6606WAPTI



Category	60cm Single Ovens
Product Family	Oven
Vitality system	Yes
Power supply	Electric
Cooking method	Multitech
Galileo cavity	Omnichef
Cleaning system	Vapor Clean
EAN code	8017709366438

Aesthetics

Aesthetics	Dolce Stil Novo	**Material**	Glass
Colour	Black	**Glass Type**	Eclipse
Finishing	Gloss	**Door**	Full glass
Design	Flat	**Handle**	Dolce Stil Novo
Interchangeable Trims	Yes	**Handle Colour**	Black
Component finish	Titanium	**Logo**	Silk screen

Controls

Display name	VivoScreen max	**No. of display languages**	20
Display technology	TFT		
Control setting	Advanced full touch	**Display languages**	Italiano, English (UK), Français (FR), Français (CA), Nederlands, Español (ES), Español (MX), Português (PT), Svenska, Русский, Deutsch (DE), Dansk, Norsk, Polski, English (AU), Suomi, Ukrainian, Kazakh, Afrikaans (ZA), Zulu (ZA)

Programs / Functions

No. of cooking functions	26
Automatic programmes	150
Steam assisted levels	3 + manual

Customisable recipes 10

Traditional cooking functions

 Static

 Fan assisted

 Ciculaire



Turbo (circulaire + bottom + upper + fan)

 ECO

 Large grill

 Fan grill (large)

 Base

 Circulaire + bottom

 Pizza

Cooking functions with pulsed steam

 Fan assisted

 Circulaire

 Circulaire + Bottom + Fan



Turbo (circulaire + bottom + upper + fan)

 Fan Grill

Cooking functions with steam

 Manual steam

 Steam + bottom + upper + fan

 Steam + circulaire + fan

Circulaire + Bottom + Fan

 Sous Vide

Other Steam functions

 Tank cleaning

 Water outlet

 Water input

 Descaling

Microwave functions

 Microwave



Microwave + bottom + top + fan

 Microwave + circulaire + fan

 Microwave + grill

Microwave + Circulaire + bottom

Microwave functions

Multitech

Twintech

Other functions

- Defrost by time
- Defrost by weight
- Proving
- Stone cooking
- BBQ
- Air-Fry
- Melt
- Soft
- Pop-corn
- Keep warm
- Plate rack/warmer
- Sabbath

Cleaning functions

- Vapor Clean

Options

Time-setting options	Delay start and automatic end cooking	**SameTime**	Yes
Minute minder	Yes	**DeltaT cooking**	Yes
Timer	3	**Showroom demo option**	Yes
Controls Lock / Child Safety	Yes	**Demo-tutorial mode**	Yes
Other options	Keep warm, Eco light, Language setting, Digital clock display, Brightness, Tones, Tones volume	**Touch guide**	Yes
		History	Yes, the last 10 functions utilised
Cooking with probe thermometer	Yes	**Rapid pre-heating**	Yes
Multi-step cooking	Yes, up to 3 steps	**Instant GO**	Yes
Smart cooking	Yes		

Technical Features

Capacity (Lt)	68 l	**Full glass inner door**	Yes
Cavity	QS-Galileo	**Total no. of door glasses**	4
Minimum Temperature	25 °C	**Soft Close hinges**	Yes
Maximum temperature	250 °C	**Soft Open**	Yes
Shelf positions	5	**Inverter**	Yes
No. of lights	2	**Stirrer**	Yes
Light type	multilevel LED	**Chimney**	Double
Light power	5 W	**Cooling system**	Centrifugal
Light when door is opened	Yes	**Cooling duct**	Double
		Speed Reduction Cooling System	Yes
Lower heating element power	1200 W	**Steam range**	20 - 100%
Upper heating element - Power	1000 W	**Usable cavity space dimensions (HxWxD)**	353x470x397 mm

Grill element - power	1700 W	**Temperature control**	Electronic
Large grill - Power	2700 W	**Cavity material**	Easy clean enamel
Circular heating element - Power	2000 W	**Water loading**	Fill&Hide 2 , automatic
		Tank capacity	2 l
Heating suspended when door is opened	Yes		
Door opening type	Standard opening		
Door	Cool		

Performance / Energy Label



Net volume of the cavity	68 litres	**Microwave effective power**	900 W
Number of cavities	1		

Accessories Included

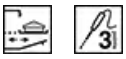

Premium rack	2	**St/steel perforated deep tray (40mm)**	1
Enamelled deep tray (50mm)	1	**Glass tray**	1
Grill mesh	1	**Telescopic Guide rails, total Extraction**	1
St/steel tray (20mm)	1	**Temperature probe**	Yes, multipoint

Electrical Connection

Voltage	220-240 V	**Nominal power (W)**	3000 W
Plug	Cable with free ends	**Frequency (Hz)**	50/60 Hz
Current	13 A	**Power supply cable length**	150 cm

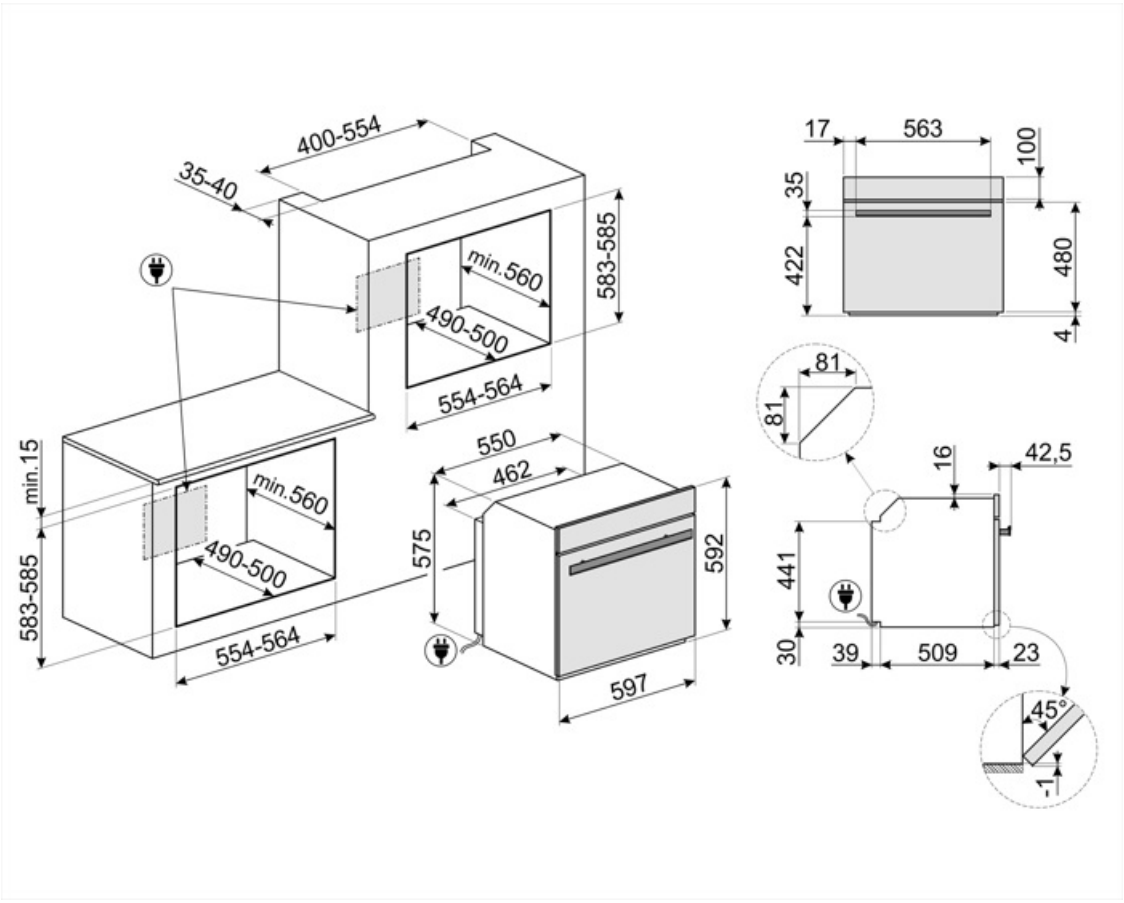
400-554
35-40
min.560
490-500
583-585
554-564
min.15
583-585
554-564
550
462
575
592
597
17
563
100
35
422
480
4
81
81
16
42,5
441
30
39
509
23
45°
1

Compatible Accessories



BBQ

Double sided plate BBQ. Suitable for recreating succulent and crispy dishes in the oven with the typical taste of grilled cooking. The ribbed side is particularly suitable for meats and cheeses. The smooth side for fish, seafood and vegetables.



ET50

Enamelled tray, 50mm deep



KIT663C



STONE2

Rectangular pizza stone without handles, suitable for 45cm and 60cm wide ovens. Dimensions W42 x H1.8 x D37.5cm. Ideal for cooking pizzas with the same results as a typical wood-fired oven. Can also be used for baking bread, focaccias and other recipes such as pies, flans or biscuits



ET20

Enamelled tray, 20mm deep



GTT2

Totally extractable telescopic guides (1 level), suitable for traditional ovens. Made in stainless steel, they guarantee stability and facilitate the smooth extraction of the trays.



KIT663X

Symbols glossary



Dedicated cooking function for the double sided plate BBQ. Suitable for recreating succulent and crispy dishes in the oven with the typical taste of g



Child lock: some models are fitted with a device to lock the programme/cycle so it cannot be accidentally changed.



Multicooking Technology: combine up to three different technologies and take the best out of them: steam, microwave, and convection cooking.



Defrost by weight: With this function the defrosting time is determined



Descaling function: Is essential to remove excess deposits of limestone in the tank and allow the proper operation of the product. The need to perform this operation is signaled by the product itself.



Automatic lighting switches off: for greater energy savings, the lighting switches off automatically after one minute from the start of cooking.



Enamel interior: The enamel interior of all Smeg ovens have a special antacid lining which helps keep the interior clean by reducing the amount of cooking grease adhering to it.



Fan with upper and lower elements: The elements combined with the fan aim to provide more uniform heat, a similar method to conventional cooking, so pre-heat is required. Most suitable for items requiring slow cooking methods.



Lower heating element only: This function is ideal for foods that require extra base temperature without browning, e.g. pastry dishes, pizza. Also suitable for slow cooking of stews and casseroles.



Fill & Hide: The water load system is designed to enhance the aesthetics of the oven. The loading and unloading tube can be easily removed from the oven and the water refilled at any time during the cooking cycle, without opening the door , guaranteeing an infinite duration of steam.



Chimney: The double chimney technology creates a special airflow inside the cavity that reduce the condensation inside the cavity during microwave cooking.



Defrost by time: with this function the time of thawing of foods are determined automatically.



DeltaT cooking: The oven automatically sets the cavity temperature to a predefined temperature (named deltaT) higher than the core temperature detected by the probe. When the probe detects an extra degree at the core, the oven automatically increases also its internal temperature by one degree.



Quadruple glazed: Number of glazed doors.



Electric



Fresh Touch: Most of Smeg ovens have a "cool door." Thanks to the combination of tangential cooling and internal heat-reflecting glasses, the temperature on the outer surface of the door is maintained below 50° C. In addition to providing safety, this system protects the sides of the furniture from overheating by the oven.



Upper and lower element only: a traditional cooking method best suited for single items located in the centre of the oven. the top pf the oven will always be hottest. Ideal for roast, fruit cakes, bread etc.



Circulaire with lower element: The addition of the lower element adds extra heat at the base for food which requires extra cooking.

Circulaire: The combination of the fan and circular element around it gives a hot air cooking method. This provides many benefits including no preheat if cook time is more than 20 minutes, no flavour transfer when cooking different foods at the same time, less energy, and shorter cook times. Good for all types of food.

Grill element: Using of grill gives excellent results when cooking meat of medium and small portions, especially when combined with a rotisserie (where possible). Also ideal for cooking sausages and bacon.

Microwave: Penetrating straight into the food, microwaves cook very quickly and with considerable energy savings. Suitable for cooking without fat, they are also able to thaw and heat food without altering its original appearance and aroma. The microwave function can also be combined with conventional functions with all the resulting advantages. Ideal for all types of food.

Microwave + grill element: The use of the grill results in a perfect browning of the surface of the food. The action of microwaves allows instead of cooking in a short time the internal part of the food.

Pizza function: The simultaneous operation of three elements ensures an optimum cooking facility when used with the Smeg pizza stone.

Steam cooking: it`s a natural way of cooking for any kind of products, from vegetables to desserts, to preserve the nutritional and organoleptic properties of ingredients. Ideal for cooking without fat, to heat up food without drying. Steam is ideal for simultaneous cooking of meals that require different cooking times.

ECO: The combination of the grill, fan and lower element is particularly suitable for cooking small quantities of food.

Fan with grill element: The fan reduces the fierce heat from the grill, providing an excellent method of grilling various foods, chops, steaks, sausages etc. giving even browning and heat distribution, without drying out the food. The top two levels recommended for use, and the lower part of the oven can be used to keep items warm at the same time, an excellent facility when cooking a grilled breakfast. Half grill (centre portion only) is ideal for small quantities of food.

Cooking with the simultaneous use of the heating element in combination with fan and microwave supply.

Fan combined with traditional cooking, where heat is generated from above and below, provides uniform heat. Adding the microwave function allows the same cooking results in less time.

Sous Vide Cooking: Steam function for perfect cooking of sous vide dishes. Enhances the taste of dishes and keeps their appearance and nutrients unaltered. Vacuum cooking (Sous Vide) made with the help of a steam oven is also an incredibly healthy and genuine type of cooking. The Sous Vide cooking technique allows heat to be efficiently transferred from the steam to the food, avoiding the loss of flavour due to oxidation and the evaporation of nutrients and moisture during cooking. Sous Vide cooking also allows better control over the cooking of food compared to traditional methods, ensuring uniform cooking results. It also allows cooking at a lower temperature than traditional cooking.

Fan combined with traditional cooking, where heat is generated from above and below, provides uniform heat. Adding the steam function allows the same cooking results in less time.

Circulaire element with steam: Cooking with the simultaneous use of the circular heating element in combination with fan and steam supply.

Circulaire with upper and lower elements: The use of the fan with both elements allows food to be cooked quickly and effectively, ideal for large joints that require thorough cooking. It offers a similar result to rotisserie, moving the heat around the food, instead of moving the food itself, enabling any size or shape to be cooked.

Circulaire with steam assist: Provides extra moisture to food during cooking. Excellent for bread baking. The moisture allows the bread dough to stretch further at the beginning of cooking, creating an aerated and light textured dough. The remaining part of the cooking process allows for the signature crust to form.

Circulaire with steam assist: Provides extra moisture to food during cooking. Excellent for bread baking. The moisture allows the bread dough to stretch further at the beginning of cooking, creating an aerated and light textured dough. The remaining part of the cooking process allows for the signature crust to form.

All glass inner door: All glass inner door, a single flat surface which is simple to keep clean.

Warming up: An option for dish warming and keeping the prepared meals hot.

Air at 40°C provides the perfect environment for proving yeast type dough mixes. Simply select the function and place dough in the cavity for allotted

Sabbath: This function allows you to cook food whilst respecting the provisions of the Jewish day of rest.

The oven cavity has 5 different cooking levels.

Appliances with Wi-Fi connectivity. Via SmegConnect App is possible to monitor and remotely control appliances through smartphone and tablet (iOS and Android).

FUN_STEAM_OTHER_WATER_IN_OUT_72dpi

Fan with grill with steam assist: For creating a perfectly roasted meat joint. The extra moisture keeps the meat juicy and tender, whilst the heat from the turbo function creates the caramelised flavours we know and love.

Circulaire + lower element with steam assist: Ideal for reheating flans and quiches. This function will re-crisp the base, whilst filling will not dry out due to the additional moisture in the cooking cavity.

Turbo with steam assist: For creating a perfectly roasted meat joint. The extra moisture keeps the meat juicy and tender, whilst the heat from the turbo function creates the caramelised flavours we know and love.

Keep warm: This function allows you to keep precooked foods warm.

Cooking with temperature probe: It is possible to display the temperature detected by the probe and set a target temperature that the dish must reach. When the core of the dish reaches the desired temperature, cooking stops

Rapid preheat: The rapid preheat function can be used to reach the selected temperature in just a few minutes.

Touch guide: By holding down any symbol for 3 seconds you can get information on its function

Smart Cooking System: for the perfect cooking it is simply necessary choosing the kind and the weight of food and the cooking temperature: any other setting will be established automatically.

Soft close: all models are equipped with advanced function of smooth closing of the door, which allows the device to close smoothly and quietly.

Step cooking: It is possible to set up to 3 cooking phases in the same recipe by varying function, time and / or temperature. At the end of a phase the next one will start automatically

Telescopic rails: allow you to pull out the dish and check it without having to remove it from the oven entirely.

Vapor Clean: a simple cleaning function using steam to loosen deposits in the oven cavity.



The capacity indicates the amount of usable space in the oven cavity in litres.



The 6.3" VIVOscreen Max display is the most complete and advanced colour touch interface available for the automatic management of programmes such as Delta T, Multi-step and SameTime.

Instant go: activating this option allows cooking to start immediately. Preheating is included in the cooking time and the oven will gradually reach the desired temperature. Particularly suitable for frozen foods.

The multi-point temperature probe has three detection points. This means that not only the core temperature is detected, but also the temperature in other areas. The oven will process all these data to avoid cooking unevenness. In this way each product can be cooked in a professional, restaurant style.

Sametime: The perfect way to have a complete menu in a few simple steps. The SameTime algorithm calculates the times, the cooking functions and all the parameters so that 3 foods can be ready at the same time.

Dedicated cooking function for the Air fryer rack AIRFRY . Ideal for recreating traditional frying in the oven, but with fewer calories and less fat.

Function to melt butter and chocolate without using the bain-marie

To guarantee the optimal functioning of the appliance, it is suggested to carry out the tank cleaning roughly once every 2-3 months.

Electronic control: Allows you to maintain temperature inside the oven with the precision 2-3 ° C. This enables to cook meals that are very sensitive to temperature changes, such as cakes, souffles, puddings.



The capacity indicates the amount of usable space in the oven cavity in litres.

Wi-Fi connectivity

Keep warm: the function allows to keep cooked food warm.

Stirrer Active and controlled microwave distribution. The Microwave Stirrer fan distributes the waves evenly within the oven, reducing the need for a turntable.



The latest generation of LED lights, positioned over the entire height of the cavity, guarantee perfect multi-level visibility. No matter how many trays you put in the oven, the food inside will always be clearly visible and you can check the progress of the cooking process. In addition to the guaranteed efficiency, the LED lights also have a modern look and low energy consumption, saving up to 80% of costs and lasting 25 times longer than traditional halogen bulbs.



The inverter technology allows to generate microwaves continuously and at the desired power The constant flow, without on and off cycles, allows you to precisely control the temperature, reduce times, avoids wasting energy and allows you to obtain excellent cooking, defrosting and re-heating results, thanks to the smaller difference between core and surface temperature in food

Dedicated cooking function for the rectangular refractory stone PPR2 Dimensions Ideal for cooking pizzas with the same results as a typical wood-fire

Function to soften butter and cheese It is useful for quickly bringing frozen desserts to serving temperature The function can also be used to soften ice cream



Function for the preparation of popcorn packaged in bags