SOA4102M1B3

Category	45cm compact
Product Family	Oven
Power supply	Electric
Heat source	ELECTRICITY
Cooking method	Combi Microwave
Galileo Technology	Micro combi
Cleaning system	Vapour Clean
EAN code	8017709328191



Aesthetics

Aesthetic	Linea	**Serigraphy colour**	Grey
Colour	Black	**Serigraphy type**	Symbols
Finishing	Glossy	**Door**	Full glass
Design	Flat	**Handle**	Linea minimal
Material	Glass	**Handle Colour**	Black
Glass Type	Clear	**Logo**	Silk screen

Controls

Display name	EvoScreen	**Control setting**	Full touch
Display technology	LCD		

Programs / Functions

No. of cooking functions	11
Automatic programmes	20

Traditional cooking functions

- Static
- Fan assisted
- Circulaire
- Eco
- Large grill
- Base
- Pizza

Microwave functions

- Microwave
- Fan assisted
- Circulaire
- Microwave + grill

Other functions

- Defrost by time
- Proving
- Stone cooking
- BBQ
- Air-Fry
- Sabbath

Cleaning functions

- Vapour Clean

Options

Time-setting options	Delay start and automatic end cooking	**Other options**	Keep warm, Eco light, Brightness, Tones
Minute minder	Yes	**Showroom demo option**	Yes
Timer	1	**Rapid pre-heating**	Yes
Controls Lock / Child Safety	Yes		

Technical Features

Capacity (Lt)	40 l	**Door opening type**	Standard opening
Cavity	QS-Galileo	**Door**	Temperate door
Minimum Temperature	25 °C	**Total no. of door glasses**	3
Maximum temperature	250 °C	**Microwave stops when door is opened**	Yes
No. of shelves	2	**Soft Close hinges**	Yes
No. of lights	2	**Soft Open**	Yes
Light type	Halogen	**Chimney**	Fixed
Light Power	40 W	**Cooling system**	Tangential
Light when door is opened	Yes		

Lower heating element power	1000 W	**Cooling duct**	Single
Grill element - power	2000 W	**Usable cavity space dimensions (HxWxD)**	211x462x401 mm
Circular heating element - Power	1400 W	**Temperature control**	Electronic
Heating suspended when door is opened	Yes	**Cavity material**	Ever clean Enamel
		Microwave screen protection	Yes

Performance / Energy Label

Net volume of the cavity	40 l	**Microwave effective power**	800 W
Number of cavities	1		

Accessories Included

Rack with back stop	1	**Glass tray**	1
Insert gird	1		

Electrical Connection

Voltage	220-240 V	**Frequency (Hz)**	50 Hz
Plug	(I) Australia	**Power supply cable length**	150 cm
Nominal power	3300 W		

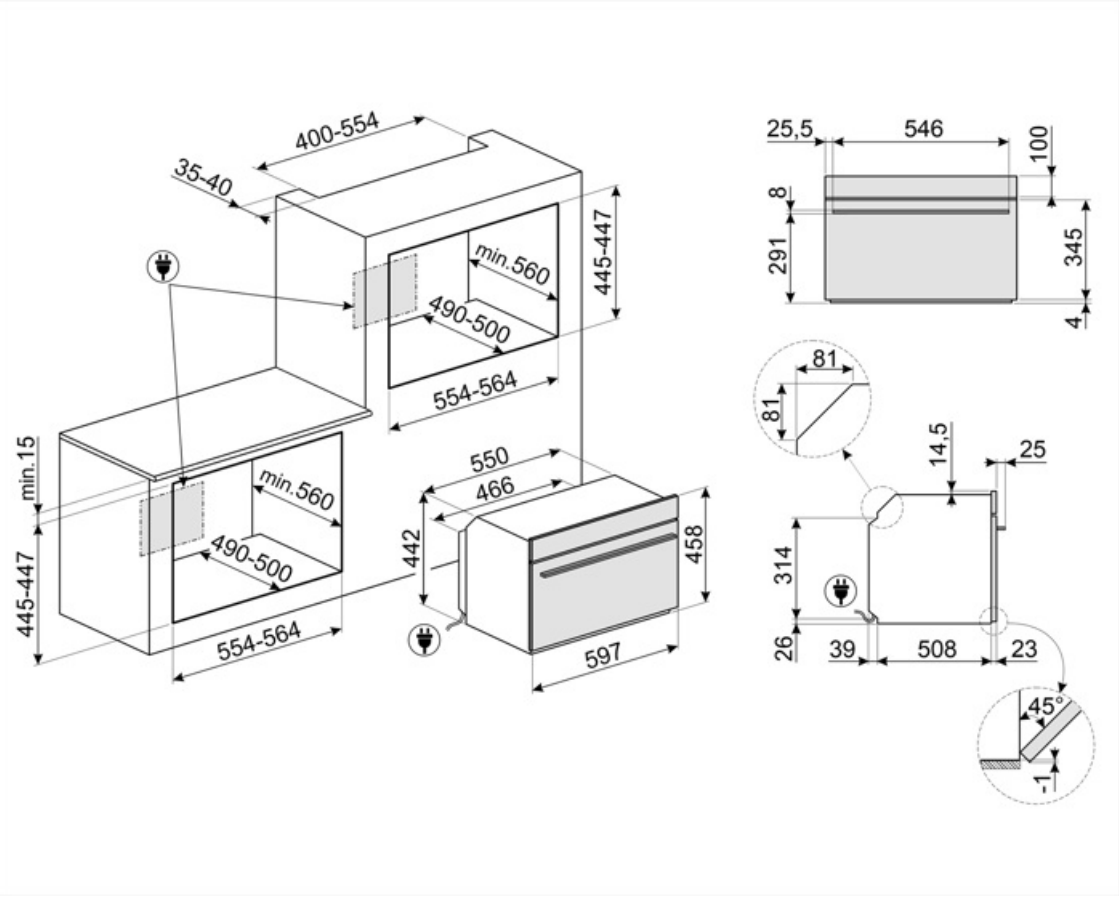

Compatible Accessories



AIRFRY2

Air fryer tray. Ideal for recreating traditional frying in the oven, but with fewer calories and less fat. It allows you to cook quickly and simply dishes such as French fries, fried vegetables and fish, ensuring perfect browning and crispiness.



ET20

Enamelled tray, 20mm deep



GTT2

Totally extractable telescopic guides (1 level), suitable for traditional ovens. Made in stainless steel, they guarantee stability and facilitate the smooth extraction of the trays.



BBQ

Double sided plate BBQ. Suitable for recreating succulent and crispy dishes in the oven with the typical taste of grilled cooking. The ribbed side is particularly suitable for meats and cheeses. The smooth side for fish, seafood and vegetables.



ET50

Enamelled tray, 50mm deep



STONE2

Rectangular pizza stone without handles, suitable for 45cm and 60cm wide ovens. Dimensions W42 x H1.8 x D37.5cm. Ideal for cooking pizzas with the same results as a typical wood-fired oven. Can also be used for baking bread, focaccias and other recipes such as pies, flans or biscuits

Symbols glossary



Dedicated cooking function for the double sided plate BBQ. Suitable for recreating succulent and crispy dishes in the oven with the typical taste of g



Combination microwave: This oven allows to combine two different ways of cooking (Traditional with microwaves). Combined ovens increase cooking opportunities,while providing maximum flexibility of household appliances.



Defrost by time: with this function the time of thawing of foods are determined automatically.



Triple glazed doors: Number of glazed doors.



Electric



Fan with upper and lower elements: The elements combined with the fan aim to provide more uniform heat, a similar method to conventional cooking, so pre-heat is required. Most suitable for items requiring slow cooking methods.



Lower heating element only: This function is ideal for foods that require extra base temperature without browning, e.g. pastry dishes, pizza. Also suitable for slow cooking of stews and casseroles.



ECO: The combination of the grill, fan and lower element is particularly suitable for cooking small quantities of food.



Microwave: Penetrating straight into the food, microwaves cook very quickly and with considerable energy savings. Suitable for cooking without fat, they are also able to thaw and heat food without altering its original appearance and aroma. The microwave function can also be combined with conventional functions with all the resulting advantages. Ideal for all types of food.



Child lock: some models are fitted with a device to lock the programme/cycle so it cannot be accidentally changed.



Air cooling system: to ensure a safe surface temperatures.



The new EVOscreen display is enhanced with new, optimised colour graphics: 5 touch buttons control functions and parameters in an extremely simple way.



Automatic lighting switches off: for greater energy savings, the lighting switches off automatically after one minute from the start of cooking.



Enamel interior: The enamel interior of all Smeg ovens have a special antacid lining which helps keep the interior clean by reducing the amount of cooking grease adhering to it.



Upper and lower element only: a traditional cooking method best suited for single items located in the centre of the oven. the top pf the oven will always be hottest. Ideal for roast, fruit cakes, bread etc.



Circulaire: The combination of the fan and circular element around it gives a hot air cooking method. This provides many benefits including no preheat if cook time is more than 20 minutes, no flavour transfer when cooking different foods at the same time, less energy, and shorter cook times. Good for all types of food.



Grill element: Using of grill gives excellent results when cooking meat of medium and small portions, especially when combined with a rotisserie (where possible). Also ideal for cooking sausages and bacon.



Cooking with the simultaneous use of the heating element in combination with fan and microwave supply.

Microwave + grill element: The use of the grill results in a perfect browning of the surface of the food. The action of microwaves allows instead of cooking in a short time the internal part of the food.

Pizza function: The simultaneous operation of three elements ensures an optimum cooking facility when used with the Smeg pizza stone.

KEEP_WARM_72dpi

Air at 40°C provides the perfect environment for proving yeast type dough mixes. Simply select the function and place dough in the cavity for allotted

Sabbath: This function allows you to cook food during the Sabbath, the Holiday of rest in the Jewish religion, respecting the precepts. The oven works

Soft close: all models are equipped with advanced function of smooth closing of the door, which allows the device to close smoothly and quietly.

Touch controls: Easy to use touch controls allow the appliance to be programmed at the touch of a button.



The capacity indicates the amount of usable space in the oven cavity in litres.

Dedicated cooking function for the Air fryer rack AIRFRY . Ideal for recreating traditional frying in the oven, but with fewer calories and less fat.

Fan combined with traditional cooking, where heat is generated from above and below, provides uniform heat. Adding the microwave function allows the same cooking results in less time.



Compact appliances with a height of 45 cm - perfect solution to meet the functional requirements of kitchen sets of small height. Available in several types and in different styles.

Side lights: Two opposing side lights increase visibility inside the oven.

Rapid preheat: The rapid preheat function can be used to reach the selected temperature in just a few minutes.



The oven cavity has 2 different cooking levels.

Electronic control: Allows you to maintain temperature inside the oven with the precision 2-3 ° C. This enables to cook meals that are very sensitive to temperature changes, such as cakes, souffles, puddings.

Vapour Clean: a simple cleaning function using steam to loosen deposits in the oven cavity.



The capacity indicates the amount of usable space in the oven cavity in litres.

Dedicated cooking function for the rectangular refractory stone PPR2 Dimensions Ideal for cooking pizzas with the same results as a typical wood-fire