SOCU3304MCX

Category	30'' compact
Product Family	Oven
Power supply	Electric
Heat source	ELECTRICITY
Cooking method	Combi Microwave
Cleaning system	Vapor Clean
EAN code	8017709343491



Aesthetics

Aesthetic	SPR	**Glass Type**	Eclipse
Colour	Stainless steel	**Door**	With 2 horizontal strips
Finishing	Fingerproof	**Handle**	SPR US
Design	Flat	**Handle Colour**	Inox
Material	Stainless steel	**Logo**	Embossed
Type of steel	Brushed		

Controls

Display name	VivoScreen	**No. of display languages**	8
Display technology	TFT		
Control setting	Full touch	**Display languages**	Italiano, English (US), Français (CA), Español (MX), Português (PT), zh-CHS, zh-CHT

Programs / Functions

No. of cooking functions	13
Automatic programmes	50
Customisable recipes	16

Traditional cooking functions

- Static
- Fan assisted
- Circulaire
- Turbo
- Eco
- Large grill
- Fan grill (large)
- Circulaire + grill
- Base
- Fan assisted base

Microwave functions

- Microwave
- Fan assisted
- Circulaire
- Microwave + grill
- Warming and re-generation

Other functions

- Defrost by time
- Defrost by weight
- Leavening
- Sabbath

Cleaning functions

- Vapor Clean

Sabbath Mode	Yes

Options

Time-setting options	Delay start and automatic end cooking	**Smart cooking**	Yes
		Showroom demo option	Yes
Minute minder	Yes	**Chronology**	Yes, the last 10 functions utilized
Timer	2		
Controls Lock / Child Safety	Yes	**Rapid pre-heating**	Yes
Other options	Keep warm, Eco light, Language setting, Digital clock display, Tones		

Technical Features

Capacity (Lt)	40 l	**Heating suspended when door is opened**	Yes
Cavity	Sares		
Minimum Temperature	95 °F	**Door opening type**	Standard opening
Maximum temperature	251,5 °F	**Door**	Temperate door
No. of shelves	3	**Total no. of door glasses**	3
No. of lights	2		

Light type	Halogen
Light Power	40 W
Light when door is opened	Yes
Lower heating element power	1000 W
Grill element - power	2000 W
Circular heating element - Power	1400 W
Microwave stops when door is opened	Yes
Cooling system	Tangential
Cooling duct	Single
Usable cavity space dimensions (HxWxD)	212x462x407 mm
Temperature control	Electronic
Cavity material	Ever clean Enamel
Microwave screen protection	Yes

Performance / Energy Label



Energy efficiency class	B
Net volume of the cavity	1.41 cu. ft.
Energy consumption per cycle in conventional mode	1,00 kWh
Energy consumption in conventional mode	3,60 MJ
Energy consumption in forced air convection	3,06 MJ
Energy consumption per cycle in fan-forced convection	0,85 kWh
Number of cavities	1
Energy efficiency index	118,1 %
Microwave effective power	1000 W

Accessories Included



Rack with back stop	2
Enamelled deep tray (40mm)	1
Glass tray	1
Telescopic Guide rails, total Extraction	1

Electrical Connection

Voltage	120/240 V
Plug	Cable with free ends
Nominal power	3400 W
Voltage 2	120/208 V
Current 2	13 A
Frequency (Hz)	60 Hz
Power supply cable length	59 1/16 "

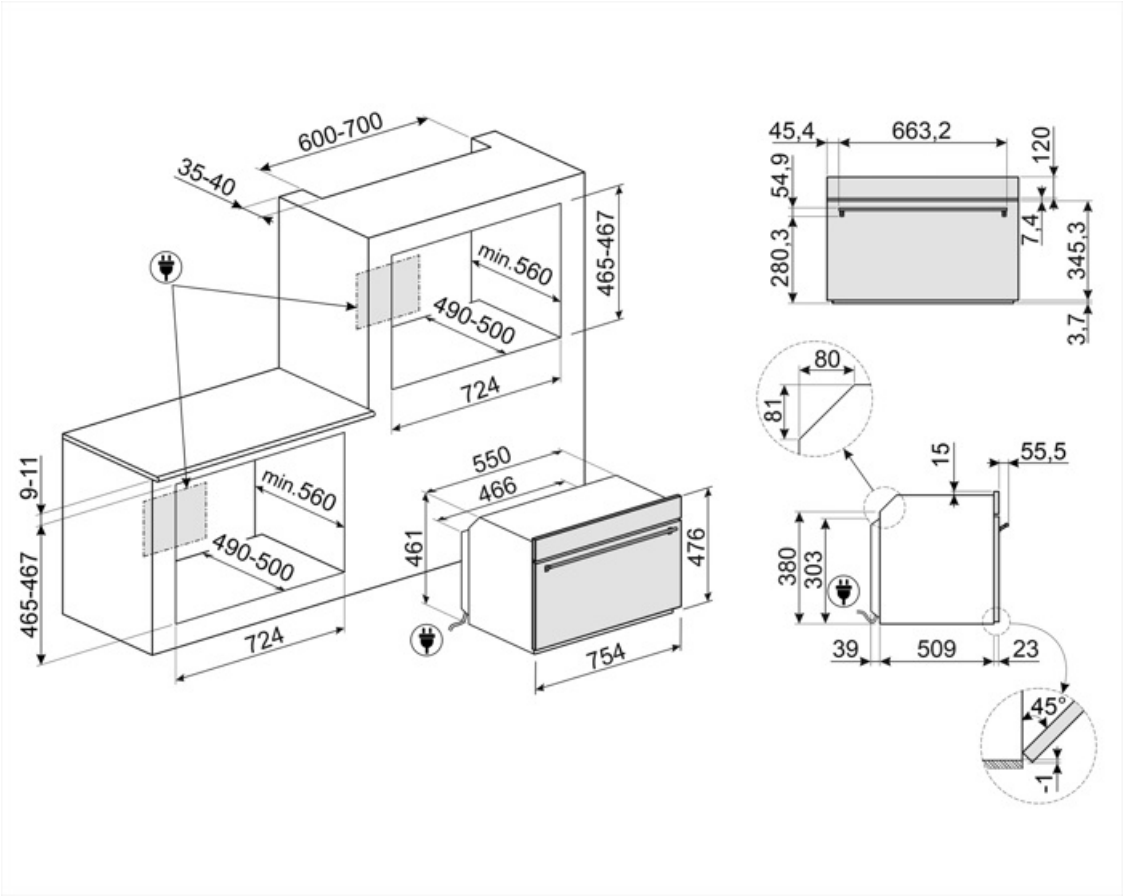
600-700
35-40
465-467
min.560
490-500
724
9-11
465-467
min.560
490-500
724
550
466
461
476
754
45,4
663,2
120
54,9
7,4
280,3
345,3
3,7
80
81
15
55,5
380
303
39
509
23
45°
1

Compatible Accessories



AIRFRY2

Air fryer tray. Ideal for recreating traditional frying in the oven, but with fewer calories and less fat. It allows you to cook quickly and simply dishes such as French fries, fried vegetables and fish, ensuring perfect browning and crispiness.



BN640

Enamelled tray suitable for 45cm and 60cm ovens. Depth 540 mm. Perfect for cooking and roasting meat and fish in sauces. Also ideal for experimenting with lighter and crunchy side dishes



GTT

Totally extractable telescopic guides (1 level), suitable for traditional ovens. Made in stainless steel, they guarantee stability and facilitate the smooth extraction of the trays.



STONE2

Rectangular pizza stone without handles, suitable for 45cm and 60cm wide ovens. Dimensions W42 x H1.8 x D37.5cm. Ideal for cooking pizzas with the same results as a typical wood-fired oven. Can also be used for baking bread, focaccias and other recipes such as pies, flans or biscuits



BN620-1

Enamelled tray suitable for 45cm and 60cm ovens. Depth 20 mm. Perfect for a wide range of savoury and sweet baking.



GTP

Partially extractable telescopic guides (1 level), suitable for traditional ovens. Made in stainless steel, they guarantee stability and facilitate the smooth extraction of the trays.



PALPZ

Pizza shovel with folding handle. Dimensions L31.5 x H32.5 cm. Easy and convenient to use and store. Perfect for serving pizza, bread and savory pastries in a safe and professional way.

Symbols glossary



Child lock: some models are fitted with a device to lock the programme/cycle so it cannot be accidentally changed.





Combination microwave: This oven allows to combine two different ways of cooking (Traditional with microwaves). Combined ovens increase cooking opportunities,while providing maximum flexibility of household appliances.



Air cooling system: to ensure a safe surface temperatures.



Defrost by time: Manual defrost function. At the end of the set duration, the function stops.



Defrost by weight: Automatic defrost function. You choose the type of food to defrost from the available categories (MEAT - FISH - BREAD - DESSERTS) After entering the weight of the food, the oven automatically defines the time required for proper defrosting.



The 4.3" VIVOscreen display offers an advanced colour touch interface, for automatic management of firing programmes such as Delta T, Multi-step and SameTime firing.



Triple glazed doors: Number of glazed doors.



Automatic lighting deactivation: For greater energy savings, the lighting turns off automatically after one minute from the start of cooking The option can be disabled via the settings menu. In this case the light will remain on for the entire duration of cooking.



Electric



Ever Clean Enamel: Ever Clean enamel is applied electrostatically, corner to corner and edge to edge to prevent cracking or cracks over time. It is a particular pyrolytic enamel, resistant to acids which, in addition to being pleasantly bright, promotes greater cleaning of the oven walls, thanks to its lower porosity. It is baked at over 850 ° C and slowly polymerized at a scientifically determined rate to ensure uniform depth and strength Ever Clean enamel creates an impeccable finish both on the inside of the oven and on the trays, making the surfaces of the oven incredibly easy to maintain over time as it reduces the adhesion of fat during cooking



Fan assisted base: the mix of fan and lower heating element alone allows to finish cooking foods already cooked on the surface but not internally more quickly. This system is recommended to finish cooking foods that are already well cooked on the surface, but not internally, which therefore require a moderate higher heat. Ideal for any type of food.



Fan assisted: Intense and homogeneous traditional cooking, also suitable for complex recipes. The fan is active and the heat comes from below and from above at the same time. Ventilated cooking ensures a faster and more homogeneous result, leaving fragrant foods outside and moister inside. Ideal for baked pasta, biscuits, roasts and cobblers.



Static: Traditional cooking suitable for the preparation of one dish at a time. The fan is not active and the heat comes from below and from above at the same time. Static cooking is slower and more delicate, ideal in order to get well cooked and dry dishes even inside. Ideal for cooking all types of roasts, fatty meats, bread, filled cakes.

Base: the heat comes only from the bottom of the cavity. The fan is not active. Ideal for sweet and savory pies, cobblers and pizzas. Designed to complete cooking and make food more crunchy This symbol in gas ovens indicates the gas burner.

Circulaire: it is the perfect function for cooking all types of dishes in a more delicate way. The heat comes from the back of the oven and is distributed quickly and evenly The fan is active. It is also ideal for cooking on multiple levels without mixing smells and flavors.

Grill: Very intense heat coming only from above from a double heating element. The fan is not active. Provides excellent grilling and gratinating results. Used at the end of cooking, it gives a uniform browning to dishes.

Cooking with the simultaneous use of the heating element in combination with fan and microwave supply.

Fan combined with traditional cooking, where heat is generated from above and below, provides uniform heat. Adding the microwave function allows the same cooking results in less time.

Microwave: Penetrating straight into the food, microwaves cook very quickly and with considerable energy savings. Suitable for cooking without fat, they are also able to thaw and heat food without altering its original appearance and aroma. The microwave function can also be combined with conventional functions with all the resulting advantages. Ideal for all types of food.

KEEP_WARM_72dpi

Air at 40°C provides the perfect environment for proving yeast type dough mixes. Simply select the function and place dough in the cavity for allotted

SABBATH: function that allows to cook food respecting Judaism's day of rest provisions.

Circulaire + grill: Circulaire with upper element or grill: Similar to fan with upper element with the added cooking speed of circulaire, ideal for dishes with a crispy topping. When used with the grill the food will brown more quickly.

ECO: low energy consumption cooking: this function is particularly suitable for cooking on a single shelf with low energy consumption. It is recommended for all types of food except those that can generate a lot of moisture (for example vegetables). To achieve maximum energy savings and reduce time, it is recommended to put the food in the oven without preheating the cooking compartment

Fan grill: very intense heat coming only from above from a double heating element The fan is active. It allows the optimal grilling of thickest meats. Ideal for large cuts of meat.

Microwave + grill element: The use of the grill results in a perfect browning of the surface of the food. The action of microwaves allows instead of cooking in a short time the internal part of the food.

This function can reheat precooked dishes, without becoming dry or hard.

Turbo: the heat comes from 3 directions: above, below and from the back of the oven The fan is active. It allows quick cooking, even on several shelves without mixing the aromas. Ideal for large volumes or foods that require intense cooking.

Side lights: Two opposing side lights increase visibility inside the oven.

Rapid preheating: cooking is preceded by the preheating phase which allows the cooking compartment to reach the set temperature. This option reduces the time by up to 50%.

The oven cavity has 3 different cooking levels.

Smart Cooking is the perfect recipe for every occasion. Meat, fish, pasta, desserts, etc . up to 150 automatic recipes that allow to make any preparation in a single click. Decide your menu and then the oven takes care of the rest.

Electronic control: Allows you to maintain temperature inside the oven with the precision 2-3 ° C. This enables to cook meals that are very sensitive to temperature changes, such as cakes, souffles, puddings.

Touch controls: Easy to use touch controls allow the appliance to be programmed at the touch of a button.



The capacity indicates the amount of usable space in the oven cavity in litres.

Telescopic rails: allow you to pull out the dish and check it without having to remove it from the oven entirely.

Tilting grill: the tilting grill can be easily unhooked to move the heating element and clean the roof of the appliance in one simple step.

Vapor Clean: a simple cleaning function using steam to loosen deposits in the oven cavity.



The capacity indicates the amount of usable space in the oven cavity in litres.