# SOP6302S2PN



| | |
|---|---|
| **Category** | 60 cm |
| **Product Family** | Oven |
| **Power supply** | Electric |
| **Heat source** | ELECTRICITY |
| **Cooking method** | Combi Steam |
| **Galileo platform** | Pyro steam |
| **Cleaning system** | Pyrolitic |
| **EAN code** | 8017709344269 |

## Aesthetics

| | | | |
|---|---|---|---|
| **Aesthetic** | Classica | **Serigraphy type** | Symbols |
| **Colour** | Matt Black | **Door** | With 2 horizontal strips |
| **Finishing** | Matt | **Handle** | Classic |
| **Design** | Flat | **Handle Colour** | Black |
| **Material** | Stainless steel | **Logo** | Silk screen |
| **Glass Type** | Eclipse | **Control knobs** | Classic |
| **Serigraphy colour** | Silver | **Controls colour** | Black |

## Controls

| | | | |
|---|---|---|---|
| **Display name** | EvoScreen | **Control setting** | Knobs & touch buttons |
| **Display technology** | LCD | **No. of controls** | 2 |

## Programs / Functions main oven

**No. of cooking functions** 12

**Traditional cooking functions**

- Static
- Fan assisted
- Circulaire
- Turbo
- Eco
- Large grill
- Base
- Pizza

**Cooking functions with steam**

 Fan assisted

 Circulaire

Turbo

Grill + fan

**Other Steam functions**

 Tank cleaning

 Water outlet

 Water input

 Descaling

**Other functions**

 Defrost by time

 Leavening

 Stone cooking

 BBQ

 Air-Fry

 Sabbath

**Cleaning functions**

 Pirolysis

## Options



| | | | |
|---|---|---|---|
| **Time-setting options** | Delay start and automatic end cooking | **Other options** | Keep warm, Eco light, Brightness, Tones |
| **Minute minder** | Yes | **Cooking with probe thermometer** | Yes |
| **Timer** | 1 | **Showroom demo option** | Yes |
| **Controls Lock / Child Safety** | Yes | **Rapid pre-heating** | Yes |

## Technical Features



| | | | |
|---|---|---|---|
| **Capacity (Lt)** | 68 l | **Removable door** | Yes |
| **Cavity** | QS-Galileo | **Full glass inner door** | Yes |
| **Minimum Temperature** | 25 °C | **Removable inner door** | Yes |
| **Maximum temperature** | 280 °C | **Total no. of door glasses** | 4 |
| **No. of shelves** | 5 | **Soft Close hinges** | Yes |
| **N. of fans** | 1 | **Soft Open** | Yes |
| **No. of lights** | 2 | **Chimney** | Fixed |
| **Light type** | Halogen | **Cooling system** | Tangential |
| **User-replaceable light** | Yes | **Cooling duct** | Double |
| **Light Power** | 40 W | **Speed Reduction Cooling System** | Yes |
| **Light when door is opened** | Yes | **Door Lock During Pyrolisis** | Yes |

| | |
|---|---|
| **Lower heating element power** | 1200 W |
| **Grill element - power** | 1750 W |
| **Circular heating element - Power** | 2000 W |
| **Heating suspended when door is opened** | Yes |
| **Door opening type** | Standard opening |
| **Door** | Cool |
| **Steam range** | 20 - 40% |
| **Usable cavity space dimensions (HxWxD)** | 353x470x401 mm |
| **Temperature control** | Electronic |
| **Cavity material** | Ever clean Enamel |
| **Water loading** | Drawer, manual |
| **Tank capacity** | 0,8 l |

## Performance / Energy Label




| | |
|---|---|
| **Energy efficiency class** | A+ |
| **Net volume of the cavity** | 68 l |
| **Energy consumption per cycle in conventional mode** | 1,09 kWh |
| **Energy consumption in conventional mode** | 3,92 MJ |
| **Energy consumption in forced air convection** | 2,45 MJ |
| **Energy consumption per cycle in fan-forced convection** | 0,68 kWh |
| **Number of cavities** | 1 |
| **Energy efficiency index** | 81 % |

## Accessories included



| | |
|---|---|
| **Rack with back stop** | 1 |
| **Enamelled tray (20mm)** | 1 |
| **Enamelled deep tray (50mm)** | 1 |
| **Insert gird** | 1 |
| **Temperature probe** | Yes, single point |

## Electrical Connection

| | |
|---|---|
| **Voltage** | 220-240 V |
| **Plug** | Not present |
| **Current** | 13 A |
| **Nominal power** | 3000 W |
| **Frequency (Hz)** | 50/60 Hz |
| **Power supply cable length** | 150 cm |

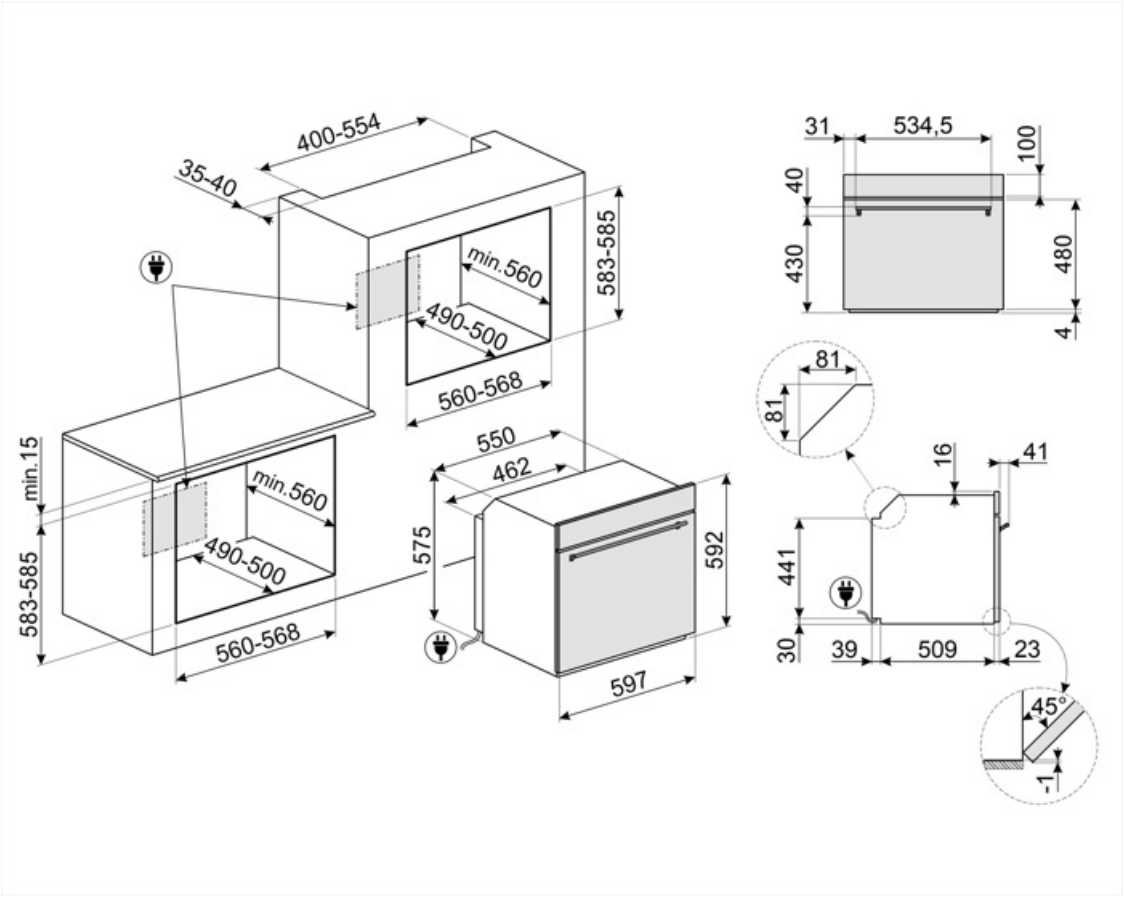
400-554
35-40
583-585
min.560
490-500
560-568
min.15
583-585
min.560
490-500
560-568
550
462
575
592
597
31
534,5
100
40
430
480
4
81
81
16
41
441
30
39
509
23
45°
1

## Compatible Accessories



### AIRFRY2

Air fryer tray. Ideal for recreating traditional frying in the oven, but with fewer calories and less fat. It allows you to cook quickly and simply dishes such as French fries, fried vegetables and fish, ensuring perfect browning and crispiness.



### ET20

Enamelled tray suitable for 45 cm and 60 cm ovens. Depth 20 mm. Perfect for a wide range of savoury and sweet baking.



### GTP2

Partially extractable telescopic guides (1 level), suitable for traditional ovens. Made in stainless steel, they guarantee stability and facilitate the smooth extraction of the trays.



### GTTV2

Totally extractable telescopic guides (1 level), suitable for steam ovens. Made in stainless steel, they guarantee stability and facilitate the smooth extraction of the trays.



### PR3845X

Antifingerprint stainless steel.  Cover for furniture in column installation of more ovens



### BBQ

Double sided plate BBQ. Suitable for recreating succulent and crispy dishes in the oven with the typical taste of grilled cooking. The ribbed side is particularly suitable for meats and cheeses. The smooth side for fish, seafood and vegetables.



### ET50

Enamelled tray suitable for 45 cm and 60 cm ovens. Depth 50 mm. Perfect for cooking and roasting meat and fish in sauces. Also ideal for experimenting with lighter and crunchy side dishes



### GTT2

Totally extractable telescopic guides (1 level), suitable for traditional ovens. Made in stainless steel, they guarantee stability and facilitate the smooth extraction of the trays.



### PALPZ

Pizza shovel with folding handle. Dimensions L31.5 x H32.5 cm. Easy and convenient to use and store. Perfect for serving pizza, bread and savory pastries in a safe and professional way.



### STONE2

Rectangular pizza stone without handles, suitable for 45cm and 60cm wide ovens. Dimensions W42 x H1.8 x D37.5cm. Ideal for cooking pizzas with the same results as a typical wood-fired oven. Can also be used for baking bread, focaccias and other recipes such as pies, flans or biscuits

## Symbols glossary



Dedicated cooking function for the double sided plate BBQ. Suitable for recreating succulent and crispy dishes in the oven with the typical taste of grilled cooking. The ribbed side is particularly suitable for meats and cheeses; the smooth side for fish, seafood and vegetables.



A+: Energy efficiency class A+ helps to save up to 10% energy compared to class A. Maximum performance with minimum consumption is guaranteed.



Combi steam ovens: The steam cooking system allows to cook any type of food more gently and quickly. Variations in temperature and steam level allow you to achieve the desired gastronomic result. Steam cooking decrease the use of fat in favor of a healthier and more genuine cuisine, and also minimizes the loss of weight and volume of food during cooking. Steam cooking is perfect for cooking meats: in addition to making them very soft, it maintains their shine and makes them more succulent. Also recommended for cooking leavened doughs and bread-making: humidity in fact allows the dough to grow and develop during cooking before creating the external crust. The result is a lighter and more digestible dough, recognizable by the larger alveolation. It is also suitable for defrosting quickly, for heating foods without hardening or drying them and for naturally desalting salted foods.



Defrost by time: Manual defrost function. At the end of the set duration, the function stops.



Quadruple glazed: Number of glazed doors.



Manual water loading system: It is possible to load the tank in less than 40 seconds. The loading is done manually thanks to a special funnel included.



Child lock: some models are fitted with a device to lock the programme/cycle so it cannot be accidentally changed.



Air cooling system: to ensure a safe surface temperatures.



Descaling function: Is essential to remove excess deposits of limestone in the tank and allow the proper operation of the product. The need to perform this operation is signaled by the product itself.



Automatic lighting deactivation: For greater energy savings, the lighting turns off automatically after one minute from the start of cooking. The option can be disabled via the settings menu. In this case the light will remain on for the entire duration of cooking.

Electric

Ever Clean Enamel: Ever Clean enamel is applied electrostatically, corner to corner and edge to edge to prevent cracking or cracks over time. It is a particular pyrolytic enamel, resistant to acids which, in addition to being pleasantly bright, promotes greater cleaning of the oven walls, thanks to its lower porosity. It is baked at over 850 °C and slowly polymerized at a scientifically determined rate to ensure uniform depth and strength. Ever Clean enamel creates an impeccable finish both on the inside of the oven and on the trays, making the surfaces of the oven incredibly easy to maintain over time as it reduces the adhesion of fat during cooking.

Fingerprint proof stainless steel: Fingerprint proof stainless steel keeps stainless steel looking as good as new.

Fresh Touch: Most of Smeg ovens have a "cool door." Thanks to the combination of tangential cooling and internal heat-reflecting glasses, the temperature on the outer surface of the door is maintained below 50° C. In addition to providing safety, this system protects the sides of the furniture from overheating by the oven.

Fan assisted: Intense and homogeneous traditional cooking, also suitable for complex recipes. The fan is active and the heat comes from below and from above at the same time. Ventilated cooking ensures a faster and more homogeneous result, leaving fragrant foods outside and moister inside. Ideal for baked pasta, biscuits, roasts and cobblers.

Static: Traditional cooking suitable for the preparation of one dish at a time. The fan is not active and the heat comes from below and from above at the same time. Static cooking is slower and more delicate, ideal in order to get well cooked and dry dishes even inside. Ideal for cooking all types of roasts, fatty meats, bread, filled cakes.

Base: the heat comes only from the bottom of the cavity. The fan is not active. Ideal for sweet and savory pies, cobblers and pizzas. Designed to complete cooking and make food more crunchy. This symbol in gas ovens indicates the gas burner.

Circulaire: it is the perfect function for cooking all types of dishes in a more delicate way. The heat comes from the back of the oven and is distributed quickly and evenly. The fan is active. It is also ideal for cooking on multiple levels without mixing smells and flavors.

ECO: low energy consumption cooking: this function is particularly suitable for cooking on a single shelf with low energy consumption. It is recommended for all types of food except those that can generate a lot of moisture (for example vegetables). To achieve maximum energy savings and reduce time, it is recommended to put the food in the oven without preheating the cooking compartment.

Grill: Very intense heat coming only from above from a double heating element. The fan is not active. Provides excellent grilling and gratinating results. Used at the end of cooking, it gives a uniform browning to dishes.

Pizza function: Specific function for cooking pizza in a pan. It allows to obtain a pizza that is soft inside and crispy outside with the topping perfectly cooked, not dry and not burnt.

Fun assisted + Steam: intense and homogeneous cooking. The fan is active and the heat comes from below and from above at the same time. The addition of steam allows better preservation of the organoleptic properties of food and improves the internal cooking of foods, which are more crunchy and digestible. Ideal for roast veal, roast duck and for cooking whole fish.

Circulaire + Steam: The addition of steam to thermoventilated cooking allows better preservation of the organoleptic properties of food. The heat comes from the back of the oven and is distributed quickly and evenly. The fan is active. It is the perfect function for cooking all types of dishes in a more delicate way. It is also ideal for cooking on multiple levels without mixing smells and flavors. Ideal for preparing roasts, chicken and baked goods such as leavened cakes and bread.

Turbo: the heat comes from 3 directions: above, below and from the back of the oven. The fan is active. It allows quick cooking, even on several shelves without mixing the aromas. Ideal for large volumes or foods that require intense cooking.

The inner door glass: can be removed with a few quick movements for cleaning.

Side lights: Two opposing side lights increase visibility inside the oven.

Temperature probe: with the temperature probe it is possible to perfectly cooking roasts, loins, meat of various cuts and sizes. In fact, the probe improve food cooking, thanks to the precise control of the temperature at the heart of the dish. The core temperature of the food is measured by a special sensor located inside the tip. When the instant temperature reaches the target temperature set by the user, cooking is finished

Rapid preheating: cooking is preceded by the preheating phase which allows the cooking compartment to reach the set temperature. This option reduces the time by up to 50%.

The oven cavity has 5 different cooking levels.

To guarantee the optimal functioning of the appliance, it is suggested to carry out the tank cleaning roughly once every 2-3 months.

FUN_STEAM_OTHER_WATER_IN_OUT_72dpi

All glass inner door: All glass inner door, a single flat surface which is simple to keep clean.

KEEP WARM

PYROLYSIS - AUTOMATIC CLEANING FUNCTION: the oven heats up to a temperature approaching 500 ° C and chars grease and food residues into a fine ash that can be easily wiped off with a damp cloth. At such a high temperature, the door locks automatically for safety, while the temperature of the door remains controlled so it is safe to touch User adjustable function based on the level of dirt present in the oven.

Air at 40°C provides the perfect environment for proving yeast type dough mixes. Simply select the function and place dough in the cavity for allotted

SABBATH: function that allows to cook food respecting Judaism's day of rest provisions.

Soft close: all models are equipped with advanced function of smooth closing of the door, which allows the device to close smoothly and quietly.

Electronic control: Allows you to maintain temperature inside the oven with the precision 2-3 ° C. This enables to cook meals that are very sensitive to temperature changes, such as cakes, souffles, puddings.




The capacity indicates the amount of usable space in the oven cavity in litres.




The capacity indicates the amount of usable space in the oven cavity in litres.



Dedicated cooking function for the rectangular refractory stone PPR2 Dimensions Ideal for cooking pizzas with the same results as a typical wood-fired oven. Can also be used for baking bread, focaccias and other recipes such as pies, flans or biscuits




The new EVOscreen display is enhanced with new, optimised colour graphics: 5 touch buttons control functions and parameters in an extremely simple way.



Dedicated cooking function for the Air fryer rack AIRFRY . Ideal for recreating traditional frying in the oven, but with fewer calories and less fat. It allows you to cook quickly and simply dishes such as French fries, fried vegetables and fish, ensuring perfect browning and crispiness.