SOP6602TTI



Category	60cm Single Ovens
Product Family	Oven
Power supply	Electric
Heat source	Electric
Cooking method	Thermo-ventilated
Galileo cavity	Traditional pyro
Cleaning system	Pyrolytic
EAN code	8017709369842

Aesthetics

Aesthetics	Dolce Stil Novo	**Material**	Glass
Colour	Black	**Glass Type**	Eclipse
Finishing	Gloss	**Door**	Full glass
Design	Flat	**Handle**	Dolce Stil Novo
Interchangeable Trims	Yes	**Handle Colour**	Black
Component finish	Titanium	**Logo**	Silk screen

Controls

Display name	EvoScreen	**Control setting**	Touch control
Display technology	LCD		

Programs / Functions

No. of cooking functions	10

Traditional cooking functions

- Static
- Fan assisted
- Ciculaire
- Turbo (circulaire + bottom + upper + fan)
- ECO
- Large grill
- Fan grill (large)
- Base
- Circulaire + bottom
- Pizza

Other functions

- Defrost by time
- Proving
- Stone cooking
- BBQ
- Air-Fry
- Sabbath

Cleaning functions

- Pyrolytic

Options

Time-setting options	Delay start and automatic end cooking	**Other options**	Keep warm, Eco light, Brightness, Tones
Minute minder	Yes	**Showroom demo option**	Yes
Timer	1	**Rapid pre-heating**	Yes
Controls Lock / Child Safety	Yes		

Technical Features

Capacity (Lt)	68 l	**Door**	Cool
Cavity	QS-Galileo	**Removable door**	Yes
Minimum Temperature	25 °C	**Full glass inner door**	Yes
Maximum temperature	280 °C	**Removable inner door**	Yes
Shelf positions	5	**Total no. of door glasses**	4
No. of lights	2	**Soft Close hinges**	Yes
Light type	Halogen	**Soft Open**	Yes
User-replaceable light	Yes	**Chimney**	Fixed
Light power	40 W	**Cooling system**	Tangential
Light when door is opened	Yes	**Cooling duct**	Double

Lower heating element power	1200 W	**Speed Reduction Cooling System**	Yes
Grill element - power	1750 W	**Door Lock During Pyrolisis**	Yes
Circular heating element - Power	2000 W	**Usable cavity space dimensions (HxWxD)**	353x470x401 mm
Heating suspended when door is opened	Yes	**Temperature control**	Electronic
Door opening type	Standard opening	**Cavity material**	Easy clean enamel

Performance / Energy Label



Energy efficiency class	A+	**Energy consumption in forced air convection**	2,45 MJ
Net volume of the cavity	68 litres	**Energy consumption per cycle in fan-forced convection**	0,68 kWh
Energy consumption per cycle in conventional mode	1,09 kWh	**Number of cavities**	1
Energy consumption in conventional mode	3,92 MJ	**Energy efficiency index**	81 %

Accessories Included



Chrome shelf	1	**Grill mesh**	1
Enamelled tray (20mm)	1	**Telescopic Guide rails, partial Extraction**	1
Enamelled deep tray (50mm)	1		

Electrical Connection

Voltage	220-240 V	**Nominal power (W)**	3000 W
Plug	Cable with free ends	**Frequency (Hz)**	50/60 Hz
Current	13 A	**Power supply cable length**	150 cm

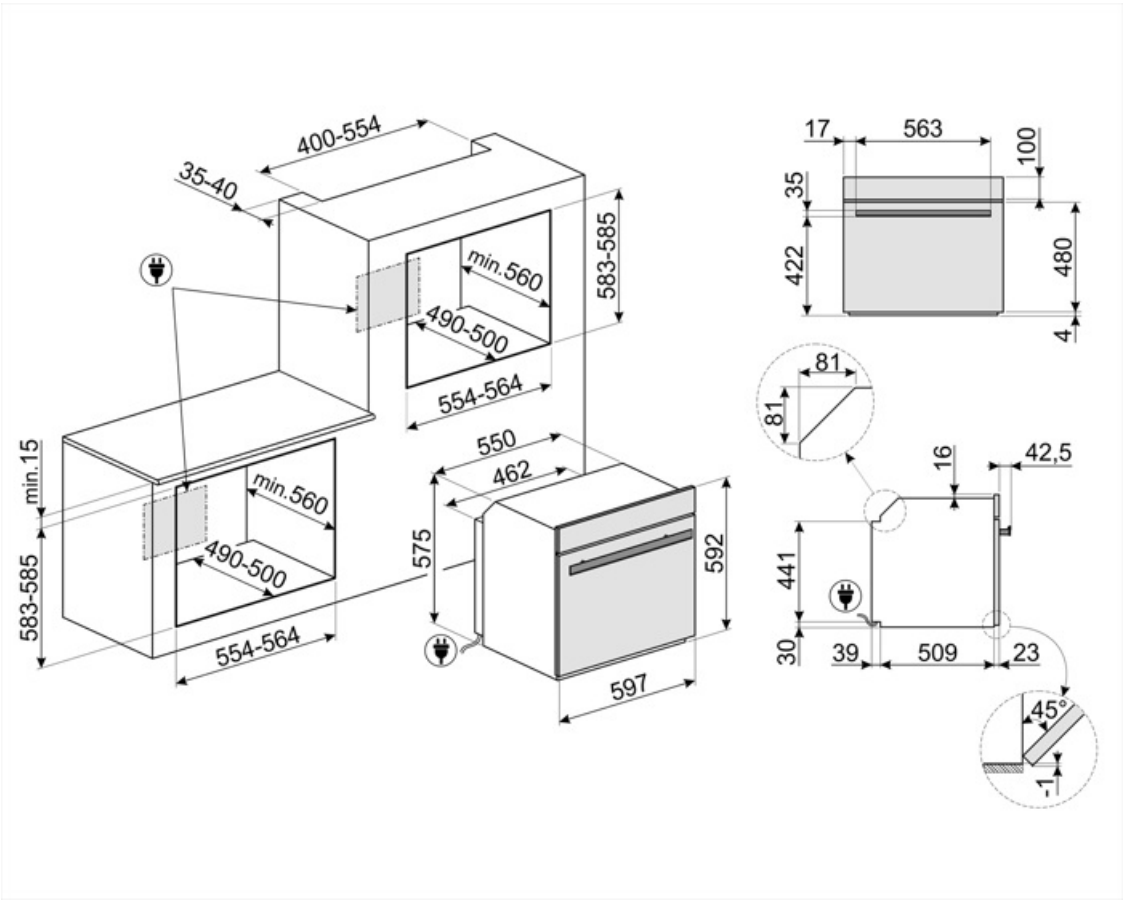
400-554
35-40
min.560
490-500
583-585
554-564
min.15
583-585
554-564
550
462
575
592
597
17
563
100
35
422
480
4
81
81
16
42,5
441
30
39
509
23
45°
1

Compatible Accessories



BBQ

Double sided plate BBQ. Suitable for recreating succulent and crispy dishes in the oven with the typical taste of grilled cooking. The ribbed side is particularly suitable for meats and cheeses. The smooth side for fish, seafood and vegetables.



ET50

Enamelled tray, 50mm deep



KIT663C



STONE2

Rectangular pizza stone without handles, suitable for 45cm and 60cm wide ovens. Dimensions W42 x H1.8 x D37.5cm. Ideal for cooking pizzas with the same results as a typical wood-fired oven. Can also be used for baking bread, focaccias and other recipes such as pies, flans or biscuits



ET20

Enamelled tray, 20mm deep



GTT2

Totally extractable telescopic guides (1 level), suitable for traditional ovens. Made in stainless steel, they guarantee stability and facilitate the smooth extraction of the trays.



KIT663X

Symbols glossary



Dedicated cooking function for the double sided plate BBQ. Suitable for recreating succulent and crispy dishes in the oven with the typical taste of g



A+: Energy efficiency class A+ helps to save up to 10% energy compared to class A. Maximum performance with minimum consumption is guaranteed.



Defrost by time: with this function the time of thawing of foods are determined automatically.



Quadruple glazed: Number of glazed doors.



Electric



Fresh Touch: Most of Smeg ovens have a "cool door." Thanks to the combination of tangential cooling and internal heat-reflecting glasses, the temperature on the outer surface of the door is maintained below 50° C. In addition to providing safety, this system protects the sides of the furniture from overheating by the oven.



Upper and lower element only: a traditional cooking method best suited for single items located in the centre of the oven. the top pf the oven will always be hottest. Ideal for roast, fruit cakes, bread etc.



Circulaire with lower element: The addition of the lower element adds extra heat at the base for food which requires extra cooking.



ECO: The combination of the grill, fan and lower element is particularly suitable for cooking small quantities of food.



Child lock: some models are fitted with a device to lock the programme/cycle so it cannot be accidentally changed.



Air cooling system: to ensure a safe surface temperatures.



The new EVOscreen display is enhanced with new, optimised colour graphics: 5 touch buttons control functions and parameters in an extremely simple way.



Automatic lighting switches off: for greater energy savings, the lighting switches off automatically after one minute from the start of cooking.



Enamel interior: The enamel interior of all Smeg ovens have a special antacid lining which helps keep the interior clean by reducing the amount of cooking grease adhering to it.



Fan with upper and lower elements: The elements combined with the fan aim to provide more uniform heat, a similar method to conventional cooking, so pre-heat is required. Most suitable for items requiring slow cooking methods.



Lower heating element only: This function is ideal for foods that require extra base temperature without browning, e.g. pastry dishes, pizza. Also suitable for slow cooking of stews and casseroles.



Circulaire: The combination of the fan and circular element around it gives a hot air cooking method. This provides many benefits including no preheat if cook time is more than 20 minutes, no flavour transfer when cooking different foods at the same time, less energy, and shorter cook times. Good for all types of food.



Grill element: Using of grill gives excellent results when cooking meat of medium and small portions, especially when combined with a rotisserie (where possible). Also ideal for cooking sausages and bacon.

Fan with grill element: The fan reduces the fierce heat from the grill, providing an excellent method of grilling various foods, chops, steaks, sausages etc. giving even browning and heat distribution, without drying out the food. The top two levels recommended for use, and the lower part of the oven can be used to keep items warm at the same time, an excellent facility when cooking a grilled breakfast. Half grill (centre portion only) is ideal for small quantities of food.

Circulaire with upper and lower elements: The use of the fan with both elements allows food to be cooked quickly and effectively, ideal for large joints that require thorough cooking. It offers a similar result to rotisserie, moving the heat around the food, instead of moving the food itself, enabling any size or shape to be cooked.

The inner door glass: can be removed with a few quick movements for cleaning.

Side lights: Two opposing side lights increase visibility inside the oven.

Air at 40°C provides the perfect environment for proving yeast type dough mixes. Simply select the function and place dough in the cavity for allotted

Sabbath: This function allows you to cook food whilst respecting the provisions of the Jewish day of rest.

Soft close: all models are equipped with advanced function of smooth closing of the door, which allows the device to close smoothly and quietly.

Electronic control: Allows you to maintain temperature inside the oven with the precision 2-3 ° C. This enables to cook meals that are very sensitive to temperature changes, such as cakes, souffles, puddings.

The capacity indicates the amount of usable space in the oven cavity in litres.

Dedicated cooking function for the Air fryer rack AIRFRY . Ideal for recreating traditional frying in the oven, but with fewer calories and less fat.

Pizza function: The simultaneous operation of three elements ensures an optimum cooking facility when used with the Smeg pizza stone.

All glass inner door: All glass inner door, a single flat surface which is simple to keep clean.

Keep warm: This function allows you to keep precooked foods warm.

Pyrolitic: Pyrolitic cleaning cycles can be selected as necessary to automatically clean the oven interior.

Rapid preheat: The rapid preheat function can be used to reach the selected temperature in just a few minutes.

The oven cavity has 5 different cooking levels.

Telescopic rails: allow you to pull out the dish and check it without having to remove it from the oven entirely.

Touch controls: Easy to use touch controls allow the appliance to be programmed at the touch of a button.

The capacity indicates the amount of usable space in the oven cavity in litres.

Dedicated cooking function for the rectangular refractory stone PPR2 Dimensions Ideal for cooking pizzas with the same results as a typical wood-fire