SOP6604TPTI



Category	60cm Single Ovens
Product Family	Oven
Power supply	Electric
Heat source	Electric
Cooking method	Thermo-ventilated
Galileo cavity	Traditional pyro
Cleaning system	Pyrolytic
EAN code	8017709369873

Aesthetics

Aesthetics	Dolce Stil Novo	**Material**	Glass
Colour	Black	**Glass Type**	Eclipse
Finishing	Gloss	**Door**	Full glass
Design	Flat	**Handle**	Dolce Stil Novo
Interchangeable Trims	Yes	**Handle Colour**	Black
Component finish	Titanium	**Logo**	Silk screen

Controls

Display name	VivoScreen	**No. of display languages**	20
Display technology	TFT		
Control setting	Touch control	**Display languages**	Italiano, English (UK), Français (FR), Français (CA), Nederlands, Español (ES), Español (MX), Português (PT), Svenska, Русский, Deutsch (DE), Dansk, Norsk, Polski, English (AU), Suomi, Ukrainian, Kazakh, Afrikaans (ZA), Zulu (ZA)

Programs / Functions

No. of cooking functions	10
Automatic programmes	150
Customisable recipes	10

Traditional cooking functions

- Static
- Fan assisted
- Ciculaire
- Turbo (circulaire + bottom + upper + fan)
- ECO
- Large grill
- Fan grill (large)
- Base
- Fan assisted base
- Pizza

Other functions

- Defrost by time
- Defrost by weight
- Proving
- Stone cooking
- BBQ
- Air-Fry
- Keep warm
- Plate rack/warmer
- Sabbath

Cleaning functions

- Pyrolytic

Options

Time-setting options	Delay start and automatic end cooking
Minute minder	Yes
Timer	3
Controls Lock / Child Safety	Yes
Other options	Keep warm, Eco light, Language setting, Digital clock display, Brightness, Eco-logic, Tones, Tones volume
Cooking with probe thermometer	Yes
Multi-step cooking	Yes, up to 2 steps
Smart cooking	Yes
SameTime	Yes
DeltaT cooking	Yes
Showroom demo option	Yes
Demo-tutorial mode	Yes
Touch guide	Yes
History	Yes, the last 10 functions utilised
Rapid pre-heating	Yes
Instant GO	Yes

Technical Features

Capacity (Lt)	68 l	**Door**	Cool

Cavity	QS-Galileo
Minimum Temperature	25 °C
Maximum temperature	280 °C
Shelf positions	5
No. of lights	2
Light type	Halogen
Light power	40 W
Light when door is opened	Yes
Lower heating element power	1200 W
Upper heating element - Power	1000 W
Grill element - power	1700 W
Large grill - Power	2700 W
Circular heating element - Power	2000 W
Heating suspended when door is opened	Yes
Door opening type	Standard opening

Removable door	Yes
Full glass inner door	Yes
Removable inner door	Yes
Total no. of door glasses	4
Soft Close hinges	Yes
Soft Open	Yes
Chimney	Fixed
Cooling system	Tangential
Cooling duct	Double
Speed Reduction Cooling System	Yes
Door Lock During Pyrolisis	Yes
Usable cavity space dimensions (HxWxD)	353x470x401 mm
Temperature control	Electronic
Cavity material	Easy clean enamel

Performance / Energy Label



Energy efficiency class	A+
Net volume of the cavity	68 litres
Energy consumption per cycle in conventional mode	1,09 kWh
Energy consumption in conventional mode	3,92 MJ
Energy consumption in forced air convection	2,45 MJ
Energy consumption per cycle in fan-forced convection	0,68 kWh
Number of cavities	1
Energy efficiency index	81 %

Accessories Included

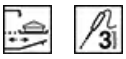

Premium rack	1
Enamelled tray (20mm)	1
Enamelled deep tray (50mm)	1
Grill mesh	1
Telescopic Guide rails, total Extraction	1
Temperature probe	Yes, multipoint

Electrical Connection

Voltage	220-240 V
Plug	Cable with free ends
Current	13 A
Nominal power (W)	3000 W
Frequency (Hz)	50/60 Hz
Power supply cable length	150 cm

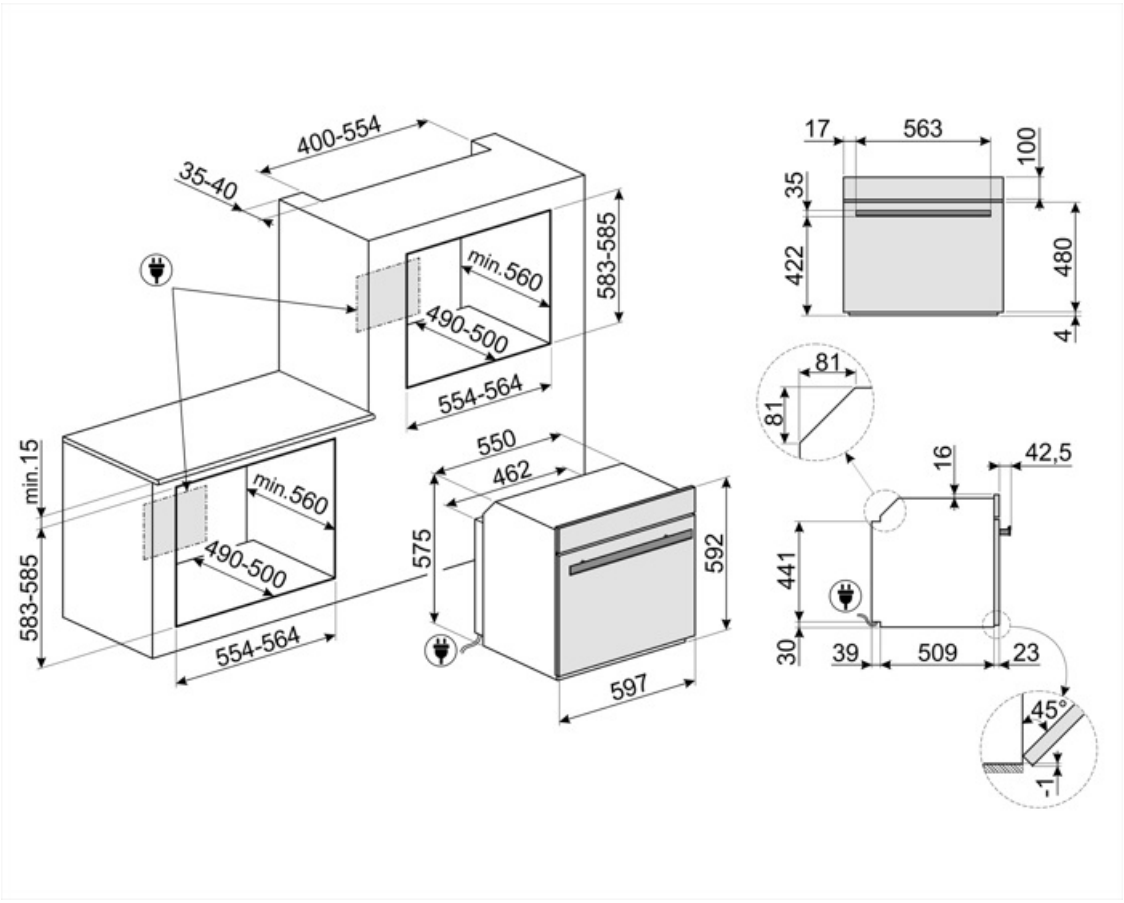
400-554
35-40
min.560
490-500
583-585
554-564
min.15
583-585
554-564
550
462
575
592
597
17
563
100
35
422
480
4
81
81
16
42,5
441
30
39
509
23
45°
1

Compatible Accessories



BBQ

Double sided plate BBQ. Suitable for recreating succulent and crispy dishes in the oven with the typical taste of grilled cooking. The ribbed side is particularly suitable for meats and cheeses. The smooth side for fish, seafood and vegetables.



ET50

Enamelled tray, 50mm deep



KIT663C



STONE2

Rectangular pizza stone without handles, suitable for 45cm and 60cm wide ovens. Dimensions W42 x H1.8 x D37.5cm. Ideal for cooking pizzas with the same results as a typical wood-fired oven. Can also be used for baking bread, focaccias and other recipes such as pies, flans or biscuits



ET20

Enamelled tray, 20mm deep



GTT2

Totally extractable telescopic guides (1 level), suitable for traditional ovens. Made in stainless steel, they guarantee stability and facilitate the smooth extraction of the trays.



KIT663X

Symbols glossary



Dedicated cooking function for the double sided plate BBQ. Suitable for recreating succulent and crispy dishes in the oven with the typical taste of g



A+: Energy efficiency class A+ helps to save up to 10% energy compared to class A. Maximum performance with minimum consumption is guaranteed.



Defrost by time: with this function the time of thawing of foods are determined automatically.



DeltaT cooking: The oven automatically sets the cavity temperature to a predefined temperature (named deltaT) higher than the core temperature detected by the probe. When the probe detects an extra degree at the core, the oven automatically increases also its internal temperature by one degree.



Quadruple glazed: Number of glazed doors.



ECO-logic: option allows you to restrict the power limit of the appliance real energy saving.



Enamel interior: The enamel interior of all Smeg ovens have a special antacid lining which helps keep the interior clean by reducing the amount of cooking grease adhering to it.



Fan assisted base: the mix of fan and lower heating element alone allows to finish cooking foods already cooked on the surface but not internally more quickly. This system is recommended to finish cooking foods that are already well cooked on the surface, but not internally, which therefore require a moderate higher heat. Ideal for any type of food.



Upper and lower element only: a traditional cooking method best suited for single items located in the centre of the oven. the top pf the oven will always be hottest. Ideal for roast, fruit cakes, bread etc.



Child lock: some models are fitted with a device to lock the programme/cycle so it cannot be accidentally changed.



Air cooling system: to ensure a safe surface temperatures.



Defrost by weight: With this function the defrosting time is determined



The 4.3" VIVOscreen display offers an advanced colour touch interface, for automatic management of firing programmes such as Delta T, Multi-step and SameTime firing.



Automatic lighting switches off: for greater energy savings, the lighting switches off automatically after one minute from the start of cooking.



Electric



Fresh Touch: Most of Smeg ovens have a "cool door." Thanks to the combination of tangential cooling and internal heat-reflecting glasses, the temperature on the outer surface of the door is maintained below 50° C. In addition to providing safety, this system protects the sides of the furniture from overheating by the oven.



Fan with upper and lower elements: The elements combined with the fan aim to provide more uniform heat, a similar method to conventional cooking, so pre-heat is required. Most suitable for items requiring slow cooking methods.



Lower heating element only: This function is ideal for foods that require extra base temperature without browning, e.g. pastry dishes, pizza. Also suitable for slow cooking of stews and casseroles.

Circulaire: The combination of the fan and circular element around it gives a hot air cooking method. This provides many benefits including no preheat if cook time is more than 20 minutes, no flavour transfer when cooking different foods at the same time, less energy, and shorter cook times. Good for all types of food.

ECO: The combination of the grill, fan and lower element is particularly suitable for cooking small quantities of food.

Grill element: Using of grill gives excellent results when cooking meat of medium and small portions, especially when combined with a rotisserie (where possible). Also ideal for cooking sausages and bacon.

Fan with grill element: The fan reduces the fierce heat from the grill, providing an excellent method of grilling various foods, chops, steaks, sausages etc. giving even browning and heat distribution, without drying out the food. The top two levels recommended for use, and the lower part of the oven can be used to keep items warm at the same time, an excellent facility when cooking a grilled breakfast. Half grill (centre portion only) is ideal for small quantities of food.

Pizza function: The simultaneous operation of three elements ensures an optimum cooking facility when used with the Smeg pizza stone.

Circulaire with upper and lower elements: The use of the fan with both elements allows food to be cooked quickly and effectively, ideal for large joints that require thorough cooking. It offers a similar result to rotisserie, moving the heat around the food, instead of moving the food itself, enabling any size or shape to be cooked.

All glass inner door: All glass inner door, a single flat surface which is simple to keep clean.

The inner door glass: can be removed with a few quick movements for cleaning.

Keep warm: This function allows you to keep precooked foods warm.

Side lights: Two opposing side lights increase visibility inside the oven.

Pyrolitic: Pyrolitic cleaning cycles can be selected as necessary to automatically clean the oven interior.

Warming up: An option for dish warming and keeping the prepared meals hot.

Cooking with temperature probe: It is possible to display the temperature detected by the probe and set a target temperature that the dish must reach. When the core of the dish reaches the desired temperature, cooking stops

Air at 40°C provides the perfect environment for proving yeast type dough mixes. Simply select the function and place dough in the cavity for allotted

Rapid preheat: The rapid preheat function can be used to reach the selected temperature in just a few minutes.

Sabbath: This function allows you to cook food whilst respecting the provisions of the Jewish day of rest.

Touch guide: By holding down any symbol for 3 seconds you can get information on its function

The oven cavity has 5 different cooking levels.

Smart Cooking System: for the perfect cooking it is simply necessary choosing the kind and the weight of food and the cooking temperature: any other setting will be established automatically.

Soft close: all models are equipped with advanced function of smooth closing of the door, which allows the device to close smoothly and quietly.

Telescopic rails: allow you to pull out the dish and check it without having to remove it from the oven entirely.

Touch controls: Easy to use touch controls allow the appliance to be programmed at the touch of a button.

Keep warm: the function allows to keep cooked food warm.

The multi-point temperature probe has three detection points. This means that not only the core temperature is detected, but also the temperature in other areas. The oven will process all these data to avoid cooking unevenness. In this way each product can be cooked in a professional, restaurant style.

The capacity indicates the amount of usable space in the oven cavity in litres.

Dedicated cooking function for the rectangular refractory stone PPR2 Dimensions Ideal for cooking pizzas with the same results as a typical wood-fire

Electronic control: Allows you to maintain temperature inside the oven with the precision 2-3 ° C. This enables to cook meals that are very sensitive to temperature changes, such as cakes, souffles, puddings.

The capacity indicates the amount of usable space in the oven cavity in litres.

Instant go: activating this option allows cooking to start immediately. Preheating is included in the cooking time and the oven will gradually reach the desired temperature. Particularly suitable for frozen foods.

Sametime: The perfect way to have a complete menu in a few simple steps. The SameTime algorithm calculates the times, the cooking functions and all the parameters so that 3 foods can be ready at the same time.

Dedicated cooking function for the Air fryer rack AIRFRY . Ideal for recreating traditional frying in the oven, but with fewer calories and less fat.