SOP6606WS2PTI



Category	60 cm
Product Family	Oven
Power supply	Electric
Heat source	ELECTRICITY
Cooking method	Combi Steam
Galileo platform	Pyro steam
Cleaning system	Pyrolitic
EAN code	8017709371708

Aesthetics

Aesthetic	Dolce Stil Novo	**Material**	Glass
Colour	Black	**Glass Type**	Eclipse
Finishing	Glossy	**Door**	Full glass
Design	Flat	**Handle**	Dolce Stil Novo
Interchangeable Trims	Yes	**Handle Colour**	Black
Component finish	Titanium	**Logo**	Silk screen

Controls

Display name	VivoScreen max	**No. of display languages**	20
Display technology	TFT		
Control setting	Advanced full touch	**Display languages**	Italiano, English (UK), Français (FR), Français (CA), Nederlands, Español (ES), Español (MX), Português (PT), Svenska, Русский, Deutsch (DE), Dansk, Norsk, Polski, English (AU), Suomi, Ukrainian, Kazakh, Afrikaans (ZA), Zulu (ZA)

Programs / Functions main oven

No. of cooking functions	19
Automatic programmes	150
Steam assisted levels	3

Customisable recipes 10

Traditional cooking functions

- Static
- Fan assisted
- Circulaire
- Turbo
- Eco
- Large grill
- Fan grill (large)
- Base
- Circulaire + bottom
- Pizza

Cooking functions with pulsed steam

- Fan assisted
- Circolaire
- Circulaire + Bottom
- Turbo
- Fan Grill

Cooking functions with steam

- Fan assisted
- Circulaire
- Turbo
- Grill + fan

Other Steam functions

- Tank cleaning
- Water outlet
- Water input
- Descaling

Other functions

- Defrost by time
- Defrost by weight
- Leavening
- Stone cooking
- BBQ
- Air-Fry
- Keep warm
- Plate rack/warmer
- Sabbath

Cleaning functions

- Pirolysis

Options

Time-setting options	Delay start and automatic end cooking	**SameTime**	Yes
		DeltaT cooking	Yes
Minute minder	Yes	**Showroom demo option**	Yes
Timer	3	**Demo-tutorial mode**	Yes
Controls Lock / Child Safety	Yes	**Touch guide**	Yes

Other options	Keep warm, Eco light, Language setting, Digital clock display, Brightness, Tones, Tones volume
Cooking with probe thermometer	Yes
Multi-step cooking	Yes, up to 3 steps
Smart cooking	Yes
Chronology	Yes, the last 10 functions utilized
Rapid pre-heating	Yes
Instant GO	Yes

Technical Features



Capacity (Lt)	68 l
Cavity	QS-Galileo
Minimum Temperature	25 °C
Maximum temperature	280 °C
No. of shelves	5
N. of fans	1
No. of lights	2
Light type	Halogen
User-replaceable light	Yes
Light Power	40 W
Light when door is opened	Yes
Lower heating element power	1200 W
Upper heating element - Power	1000 W
Grill element - power	1700 W
Large grill - Power	2700 W
Circular heating element - Power	2000 W
Heating suspended when door is opened	Yes
Door opening type	Standard opening
Door	Cool
Removable door	Yes
Full glass inner door	Yes
Removable inner door	Yes
Total no. of door glasses	4
Soft Close hinges	Yes
Soft Open	Yes
Chimney	Fixed
Cooling system	Tangential
Cooling duct	Double
Speed Reduction Cooling System	Yes
Door Lock During Pyrolisis	Yes
Steam range	20 - 40%
Usable cavity space dimensions (HxWxD)	353x470x401 mm
Temperature control	Electronic
Cavity material	Ever clean Enamel
Water loading	Drawer, manual
Tank capacity	0,8 l

Performance / Energy Label



Energy efficiency class	A+
Net volume of the cavity	68 l
Energy consumption per cycle in conventional mode	1.09 kWh
Energy consumption in conventional mode	3.92 MJ
Energy consumption in forced air convection	2.45 MJ
Energy consumption per cycle in fan-forced convection	0.68 kWh
Number of cavities	1
Energy efficiency index	81 %

Accessories included



Luxory rack (inox)	1
Enamelled tray (20mm)	1
Enamelled deep tray (50mm)	1
Insert gird	1
Telescopic Guide rails, total Extraction	1
Temperature probe	Yes, multipoint
Other	water loading kit

Electrical Connection

Voltage	220-240 V	**Nominal power**	3000 W
Plug	Cable with free ends	**Frequency (Hz)**	50/60 Hz
Current	13 A	**Power supply cable length**	150 cm

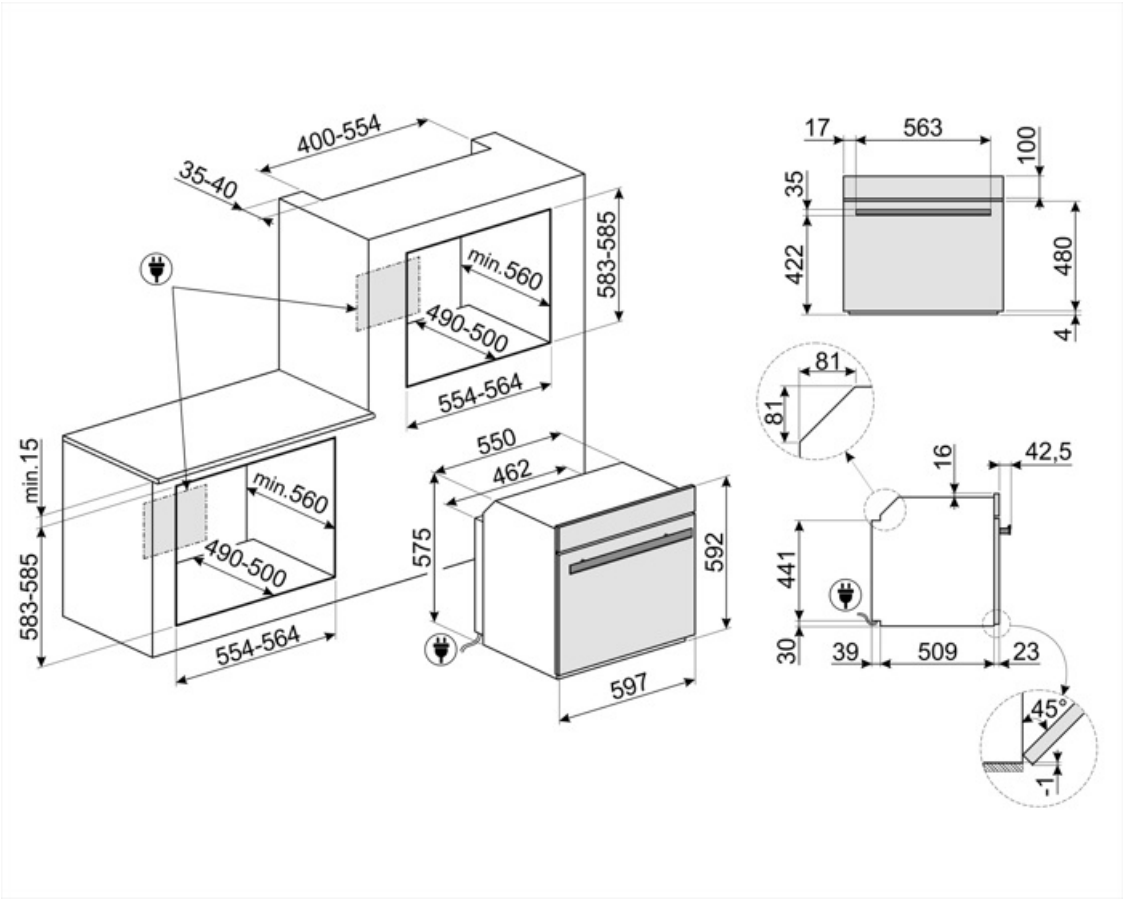

Compatible Accessories



BBQ

Double sided plate BBQ. Suitable for recreating succulent and crispy dishes in the oven with the typical taste of grilled cooking. The ribbed side is particularly suitable for meats and cheeses. The smooth side for fish, seafood and vegetables.



ET50

Enamelled tray suitable for 45 cm and 60 cm ovens. Depth 50 mm. Perfect for cooking and roasting meat and fish in sauces. Also ideal for experimenting with lighter and crunchy side dishes



KIT663C



STONE2

Rectangular pizza stone without handles, suitable for 45cm and 60cm wide ovens. Dimensions W42 x H1.8 x D37.5cm. Ideal for cooking pizzas with the same results as a typical wood-fired oven. Can also be used for baking bread, focaccias and other recipes such as pies, flans or biscuits



ET20

Enamelled tray suitable for 45 cm and 60 cm ovens. Depth 20 mm. Perfect for a wide range of savoury and sweet baking.



GTTV2

Totally extractable telescopic guides (1 level), suitable for steam ovens. Made in stainless steel, they guarantee stability and facilitate the smooth extraction of the trays.



KIT663X

Symbols glossary



A+: Energy efficiency class A+ helps to save up to 10% energy compared to class A. Maximum performance with minimum consumption is guaranteed.



Combi steam ovens: The steam cooking system allows to cook any type of food more gently and quickly. Variations in temperature and steam level allow you to achieve the desired gastronomic result. Steam cooking decrease the use of fat in favor of a healthier and more genuine cuisine, and also minimizes the loss of weight and volume of food during cooking. Steam cooking is perfect for cooking meats: in addition to making them very soft, it maintains their shine and makes them more succulent. Also recommended for cooking leavened doughs and bread-making: humidity in fact allows the dough to grow and develop during cooking before creating the external crust. The result is a lighter and more digestible dough, recognizable by the larger alveolation. It is also suitable for defrosting quickly, for heating foods without hardening or drying them and for naturally desalting salted foods.



Defrost by time: Manual defrost function. At the end of the set duration, the function stops.



Descaling function: Is essential to remove excess deposits of limestone in the tank and allow the proper operation of the product. The need to perform this operation is signaled by the product itself.



Automatic lighting deactivation: For greater energy savings, the lighting turns off automatically after one minute from the start of cooking. The option can be disabled via the settings menu. In this case the light will remain on for the entire duration of cooking.



Child lock: some models are fitted with a device to lock the programme/cycle so it cannot be accidentally changed.



Air cooling system: to ensure a safe surface temperatures.



Defrost by weight: Automatic defrost function. You choose the type of food to defrost from the available categories (MEAT - FISH - BREAD - DESSERTS). After entering the weight of the food, the oven automatically defines the time required for proper defrosting.



Quadruple glazed: Number of glazed doors.



Electric



Ever Clean Enamel: Ever Clean enamel is applied electrostatically, corner to corner and edge to edge to prevent cracking or cracks over time. It is a particular pyrolytic enamel, resistant to acids which, in addition to being pleasantly bright, promotes greater cleaning of the oven walls, thanks to its lower porosity. It is baked at over 850 °C and slowly polymerized at a scientifically determined rate to ensure uniform depth and strength. Ever Clean enamel creates an impeccable finish both on the inside of the oven and on the trays, making the surfaces of the oven incredibly easy to maintain over time as it reduces the adhesion of fat during cooking.



Fan assisted: Intense and homogeneous traditional cooking, also suitable for complex recipes. The fan is active and the heat comes from below and from above at the same time. Ventilated cooking ensures a faster and more homogeneous result, leaving fragrant foods outside and moister inside. Ideal for baked pasta, biscuits, roasts and cobblers.



Base: the heat comes only from the bottom of the cavity. The fan is not active. Ideal for sweet and savory pies, cobblers and pizzas. Designed to complete cooking and make food more crunchy. This symbol in gas ovens indicates the gas burner.



Circulaire: it is the perfect function for cooking all types of dishes in a more delicate way. The heat comes from the back of the oven and is distributed quickly and evenly. The fan is active. It is also ideal for cooking on multiple levels without mixing smells and flavors.



Grill: Very intense heat coming only from above from a double heating element. The fan is not active. Provides excellent grilling and gratinating results. Used at the end of cooking, it gives a uniform browning to dishes.



Pizza function: Specific function for cooking pizza in a pan. It allows to obtain a pizza that is soft inside and crispy outside with the topping perfectly cooked, not dry and not burnt.



Fresh Touch: Most of Smeg ovens have a "cool door." Thanks to the combination of tangential cooling and internal heat-reflecting glasses, the temperature on the outer surface of the door is maintained below 50° C. In addition to providing safety, this system protects the sides of the furniture from overheating by the oven.



Static: Traditional cooking suitable for the preparation of one dish at a time. The fan is not active and the heat comes from below and from above at the same time. Static cooking is slower and more delicate, ideal in order to get well cooked and dry dishes even inside. Ideal for cooking all types of roasts, fatty meats, bread, filled cakes.



Circulaire with lower element: The addition of the lower element adds extra heat at the base for food which requires extra cooking.



ECO: low energy consumption cooking: this function is particularly suitable for cooking on a single shelf with low energy consumption. It is recommended for all types of food except those that can generate a lot of moisture (for example vegetables). To achieve maximum energy savings and reduce time, it is recommended to put the food in the oven without preheating the cooking compartment.



Fan grill: very intense heat coming only from above from a double heating element. The fan is active. It allows the optimal grilling of thickest meats. Ideal for large cuts of meat.



Fun assisted + Steam: intense and homogeneous cooking. The fan is active and the heat comes from below and from above at the same time. The addition of steam allows better preservation of the organoleptic properties of food and improves the internal cooking of foods, which are more crunchy and digestible. Ideal for roast veal, roast duck and for cooking whole fish.



Circulaire + Steam: The addition of steam to thermoventilated cooking allows better preservation of the organoleptic properties of food. The heat comes from the back of the oven and is distributed quickly and evenly. The fan is active. It is the perfect function for cooking all types of dishes in a more delicate way. It is also ideal for cooking on multiple levels without mixing smells and flavors. Ideal for preparing roasts, chicken and baked goods such as leavened cakes and bread.



Turbo: the heat comes from 3 directions: above, below and from the back of the oven. The fan is active. It allows quick cooking, even on several shelves without mixing the aromas. Ideal for large volumes or foods that require intense cooking.



Circulaire pulsed steam: Provides extra moisture to food during cooking. Excellent for bread baking. The moisture allows the bread dough to stretch further at the beginning of cooking, creating an aerated and light textured dough. The remaining part of the cooking process allows for the signature crust to form.



Circulaire pulsed steam: Provides extra moisture to food during cooking. Excellent for bread baking. The moisture allows the bread dough to stretch further at the beginning of cooking, creating an aerated and light textured dough. The remaining part of the cooking process allows for the signature crust to form.



All glass inner door: All glass inner door, a single flat surface which is simple to keep clean.



KEEP WARM



PYROLYSIS - AUTOMATIC CLEANING FUNCTION: the oven heats up to a temperature approaching 500 ° C and chars grease and food residues into a fine ash that can be easily wiped off with a damp cloth. At such a high temperature, the door locks automatically for safety, while the temperature of the door remains controlled so it is safe to touch User adjustable function based on the level of dirt present in the oven.



FUN_STEAM_OTHER_WATER_IN_OUT_72dpi



Fan with grill pulsed steam: For creating a perfectly roasted meat joint. The extra moisture keeps the meat juicy and tender, whilst the heat fro



Circulaire + lower element pulsed steam: Ideal for reheating flans and quiches. This function will re-crisp the base, whilst filling will not dry out due to the additional moisture in the cooking cavity.



Turbo pulsed steam: For creating a perfectly roasted meat joint. The extra moisture keeps the meat juicy and tender, whilst the heat from the turbo function creates the caramelised flavours we know and love.



The inner door glass: can be removed with a few quick movements for cleaning.



Side lights: Two opposing side lights increase visibility inside the oven.



Plate rack warming: function for heating or keeping dishes warm. Place the baking tray on the lowest shelf and stack the dishes to be heated.

Temperature probe: with the temperature probe it is possible to perfectly cooking roasts, loins, meat of various cuts and sizes. In fact, the probe improve food cooking, thanks to the precise control of the temperature at the heart of the dish. The core temperature of the food is measured by a special sensor located inside the tip. When the instant temperature reaches the target temperature set by the user, cooking is finished

Rapid preheating: cooking is preceded by the preheating phase which allows the cooking compartment to reach the set temperature. This option reduces the time by up to 50%.

Option designed to solve any doubts More than 100 pop-ups, which can be triggered with a long touch on any icon, provide information on the use of the display and cooking.

Smart Cooking is the perfect recipe for every occasion. Meat, fish, pasta, desserts, etc . up to 150 automatic recipes that allow to make any preparation in a single click. Decide your menu and then the oven takes care of the rest.

Soft close: all models are equipped with advanced function of smooth closing of the door, which allows the device to close smoothly and quietly.

To guarantee the optimal functioning of the appliance, it is suggested to carry out the tank cleaning roughly once every 2-3 months.

Electronic control: Allows you to maintain temperature inside the oven with the precision 2-3 ° C. This enables to cook meals that are very sensitive to temperature changes, such as cakes, souffles, puddings.

Wi-Fi connectivity

Keep warm: the function allows to keep cooked food warm.

Air at 40°C provides the perfect environment for proving yeast type dough mixes. Simply select the function and place dough in the cavity for allotted

SABBATH: function that allows to cook food respecting Judaism's day of rest provisions.

The oven cavity has 5 different cooking levels.

Appliances with Wi-Fi connectivity. Via SmegConnect App is possible to monitor and remotely control appliances through smartphone and tablet (iOS and Android).

Multistep Cooking: It is possible to set up to 3 cooking phases during the same recipe. Cooking technology, function, time and temperature can be varied. At the end of a phase, the following will start automatically.

Telescopic rails: allow you to pull out the dish and check it without having to remove it from the oven entirely.

The capacity indicates the amount of usable space in the oven cavity in litres.

The 6.3" VIVOscreen Max display is the most complete and advanced colour touch interface available for the automatic management of firing programmes such as Delta T, Multi-step and SameTime firing.

INSTANT GO: activating this option allow to start cooking immediately. Preheating is included in the cooking time and the oven will gradually reach the desired temperature Particularly suitable for frozen foods.



The multi-point temperature probe has three detection points. This means that not only the core temperature is detected, but also the temperature in other areas. The oven will process all these data to avoid cooking unevenness. In this way each product can be cooked in a professional, restaurant style.



The perfect way to have a complete menu in a few simple steps with a considerable saving of time. The large cavity can accommodate multiple types of food at the same time, which can be cooked without any exchange of odors. The carefully studied thermodynamic flows ensure uniform cooking at every level. The SameTime algorithm calculates the times, the cooking functions and all the parameters so that 3 foods can be ready at the same time.



Dedicated cooking function for the double sided plate BBQ. Suitable for recreating succulent and crispy dishes in the oven with the typical taste of grilled cooking. The ribbed side is particularly suitable for meats and cheeses; the smooth side for fish, seafood and vegetables.



Dedicated cooking function for the rectangular refractory stone PPR2 Dimensions Ideal for cooking pizzas with the same results as a typical wood-fired oven. Can also be used for baking bread, focaccias and other recipes such as pies, flans or biscuits



Manual water loading system: It is possible to load the tank in less than 40 seconds. The loading is done manually thanks to a special funnel included.



The capacity indicates the amount of usable space in the oven cavity in litres.



Dedicated cooking function for the Air fryer rack AIRFRY . Ideal for recreating traditional frying in the oven, but with fewer calories and less fat. It allows you to cook quickly and simply dishes such as French fries, fried vegetables and fish, ensuring perfect browning and crispiness.



DeltaT cooking The oven automatically sets the cavity temperature to a predefined temperature (named deltaT) higher than the core temperature detected by the probe. When the probe detects an extra degree at the core, the oven automatically increases also its internal temperature by one degree. The oven offers the possibility to choose between three different deltaT cooking modes (slow, medium and fast) and to set any desired core temperature. A concentration of technology that makes it possible to obtain tender, juicy, healthy products of the highest quality.