SOP6900TN



Category	60cm Single Ovens
Product Family	Oven
Power supply	Electric
Heat source	Electric
Cooking method	Thermo-ventilated
Galileo cavity	Traditional pyro
Cleaning system	Pyrolytic
EAN code	8017709314903

Aesthetics

Aesthetics	Victoria	**Door**	With panel
Colour	Black	**Handle**	Victoria
Design	Rounded	**Handle Colour**	Stainless steel
Material	Painted material	**Logo**	Applied
Glass Type	Clear1	**Control knobs**	Victoria
Serigraphy colour	White	**Controls colour**	Steel effect
Serigraphy type	Symbols		

Controls

DIGI screen

Display name	DigiScreen	**Control setting**	Control knobs
Display technology	LED	**No. of controls**	2

Programs / Functions

No. of cooking functions	9

Traditional cooking functions

- Static
- Fan assisted
- Ciculaire
- Turbo (circulaire + bottom + upper + fan)
- ECO
- Large grill
- Fan grill (large)
- Base
- Fan assisted base

Cleaning functions

- Pyrolytic

Options

Time-setting options	Delay start and automatic end cooking	**Timer**	1
Minute minder	Yes		

Technical Features

Capacity (Lt)	68 l	**Heating suspended when door is opened**	Yes
Cavity	QS-Galileo	**Door opening type**	Standard opening
Minimum Temperature	30 °C	**Door**	Cool
Maximum temperature	260 °C	**Removable door**	Yes
Shelf positions	5	**Full glass inner door**	Yes
No. of lights	2	**Removable inner door**	Yes
Light type	Halogen	**Total no. of door glasses**	4
User-replaceable light	Yes	**Chimney**	Fixed
Light power	40 W	**Cooling system**	Tangential
Light when door is opened	Yes	**Cooling duct**	Double
Lower heating element power	1200 W	**Door Lock During Pyrolisis**	Yes
Upper heating element - Power	1000 W	**Usable cavity space dimensions (HxWxD)**	353x470x401 mm
Grill element - power	1700 W	**Temperature control**	Electronic
Large grill - Power	2700 W	**Cavity material**	Easy clean enamel

Circular heating element - Power	2000 W

Performance / Energy Label



Energy efficiency class	A	**Energy consumption in forced air convection**	2.88 MJ
Net volume of the cavity	68 litres	**Energy consumption per cycle in fan-forced convection**	0.80 kWh
Energy consumption per cycle in conventional mode	1.09 kWh	**Number of cavities**	1
Energy consumption in conventional mode	3.92 MJ	**Energy efficiency index**	95.2 %

Accessories Included

Chrome shelf	1	**Enamelled deep tray (50mm)**	1

Electrical Connection

Voltage	220-240 V	**Nominal power (W)**	3000 W
Plug	No	**Frequency (Hz)**	50/60 Hz
Current	13 A	**Power supply cable length**	150 cm

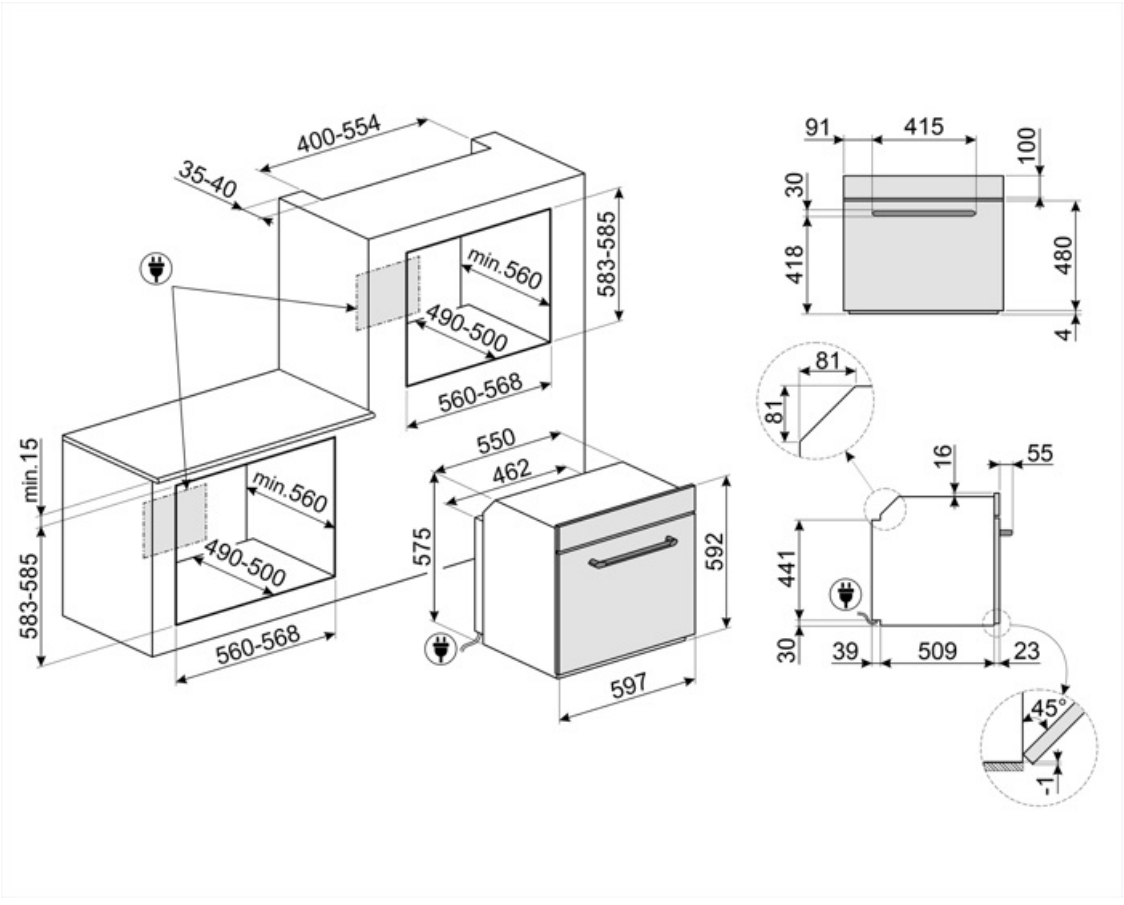

Compatible Accessories



AIRFRY2

Air fryer tray. Ideal for recreating traditional frying in the oven, but with fewer calories and less fat. It allows you to cook quickly and simply dishes such as French fries, fried vegetables and fish, ensuring perfect browning and crispiness.



ET20

Enamelled tray, 20mm deep



GTP2

Partially extractable telescopic guides (1 level), suitable for traditional ovens. Made in stainless steel, they guarantee stability and facilitate the smooth extraction of the trays.



PALPZ

Pizza shovel with fold away handle width: 315mm length : 325mm



STONE2

Rectangular pizza stone without handles, suitable for 45cm and 60cm wide ovens. Dimensions W42 x H1.8 x D37.5cm. Ideal for cooking pizzas with the same results as a typical wood-fired oven. Can also be used for baking bread, focaccias and other recipes such as pies, flans or biscuits



BBQ

Double sided plate BBQ. Suitable for recreating succulent and crispy dishes in the oven with the typical taste of grilled cooking. The ribbed side is particularly suitable for meats and cheeses. The smooth side for fish, seafood and vegetables.



ET50

Enamelled tray, 50mm deep



GTT2

Totally extractable telescopic guides (1 level), suitable for traditional ovens. Made in stainless steel, they guarantee stability and facilitate the smooth extraction of the trays.



PR3845X

Antifingerprint stainless steel. Cover for furniture in column installation of more ovens

Alternative products



SOP6900TX

Stainless steel



SOP6900TP

Cream

Symbols glossary



Child lock: some models are fitted with a device to lock the programme/cycle so it cannot be accidentally changed.



Air cooling system: to ensure a safe surface temperatures.



Quadruple glazed: Number of glazed doors.



Enamel interior: The enamel interior of all Smeg ovens have a special antacid lining which helps keep the interior clean by reducing the amount of cooking grease adhering to it.



Fan assisted base: the mix of fan and lower heating element alone allows to finish cooking foods already cooked on the surface but not internally more quickly. This system is recommended to finish cooking foods that are already well cooked on the surface, but not internally, which therefore require a moderate higher heat. Ideal for any type of food.



Upper and lower element only: a traditional cooking method best suited for single items located in the centre of the oven. the top pf the oven will always be hottest. Ideal for roast, fruit cakes, bread etc.



Circulaire: The combination of the fan and circular element around it gives a hot air cooking method. This provides many benefits including no preheat if cook time is more than 20 minutes, no flavour transfer when cooking different foods at the same time, less energy, and shorter cook times. Good for all types of food.



Grill element: Using of grill gives excellent results when cooking meat of medium and small portions, especially when combined with a rotisserie (where possible). Also ideal for cooking sausages and bacon.



A: Product drying performance, measured from A+++ to D / G depending on the product family



The touch timer display or DigiScreen guarantees simple functionality. They display the time, set programmed cooking and the minute minder timer.



Electric



Fresh Touch: Most of Smeg ovens have a "cool door." Thanks to the combination of tangential cooling and internal heat-reflecting glasses, the temperature on the outer surface of the door is maintained below 50° C. In addition to providing safety, this system protects the sides of the furniture from overheating by the oven.



Fan with upper and lower elements: The elements combined with the fan aim to provide more uniform heat, a similar method to conventional cooking, so pre-heat is required. Most suitable for items requiring slow cooking methods.



Lower heating element only: This function is ideal for foods that require extra base temperature without browning, e.g. pastry dishes, pizza. Also suitable for slow cooking of stews and casseroles.



ECO: The combination of the grill, fan and lower element is particularly suitable for cooking small quantities of food.



Fan with grill element: The fan reduces the fierce heat from the grill, providing an excellent method of grilling various foods, chops, steaks, sausages etc. giving even browning and heat distribution, without drying out the food. The top two levels recommended for use, and the lower part of the oven can be used to keep items warm at the same time, an excellent facility when cooking a grilled breakfast. Half grill (centre portion only) is ideal for small quantities of food.

Circulaire with upper and lower elements: The use of the fan with both elements allows food to be cooked quickly and effectively, ideal for large joints that require thorough cooking. It offers a similar result to rotisserie, moving the heat around the food, instead of moving the food itself, enabling any size or shape to be cooked.

The inner door glass: can be removed with a few quick movements for cleaning.

Pyrolitic: Pyrolitic cleaning cycles can be selected as necessary to automatically clean the oven interior.

Electronic control: Allows you to maintain temperature inside the oven with the precision 2-3 ° C. This enables to cook meals that are very sensitive to temperature changes, such as cakes, souffles, puddings.



The capacity indicates the amount of usable space in the oven cavity in litres.

All glass inner door: All glass inner door, a single flat surface which is simple to keep clean.

Side lights: Two opposing side lights increase visibility inside the oven.



The oven cavity has 5 different cooking levels.



The capacity indicates the amount of usable space in the oven cavity in litres.