SOPA6302S2PX



Category	60cm
Product Family	Oven
Power supply	Electric
Heat source	ELECTRICITY
Cooking method	Combi Steam
Galileo Technology	Pyro steam
Cleaning system	Pyrolitic
EAN code	8017709313975

Aesthetics

Aesthetic	Classic	**Serigraphy type**	Symbols
Colour	Stainless steel	**Door**	With 2 horizontal strips
Finishing	Fingerproof	**Handle**	Classic
Design	Flat	**Handle Colour**	Steel effect
Material	Stainless steel	**Logo**	Embossed
Glass Type	Eclipse	**Control knobs**	Classic
Serigraphy colour	Black		

Controls

Display name	EvoScreen	**Control setting**	Knobs & touch buttons
Display technology	LCD	**No. of controls**	2

Programs / Functions

No. of cooking functions 12

Traditional cooking functions

- Static
- Fan assisted
- Circulaire
- Turbo
- Eco
- Large grill
- Base
- Pizza

Cooking functions with steam

 Fan assisted

 Circulaire

Turbo

Grill + fan

Other Steam functions

 Tank cleaning

 Water outlet

 Water input

 Descaling

Other functions

 Defrost by time

 Proving

 Stone cooking

 BBQ

 Air-Fry

 Sabbath

Cleaning functions

 Pirolysis

Options



Time-setting options	Delay start and automatic end cooking	**Other options**	Keep warm, Eco light, Brightness, Tones
Minute minder	Yes	**Cooking with probe thermometer**	Yes
Timer	1	**Showroom demo option**	Yes
Controls Lock / Child Safety	Yes	**Rapid pre-heating**	Yes

Technical Features



Capacity (Lt)	68 l	**Removable door**	Yes
Cavity	QS-Galileo	**Full glass inner door**	Yes
Minimum Temperature	25 °C	**Removable inner door**	Yes
Maximum temperature	280 °C	**Total no. of door glasses**	4
No. of shelves	5	**Soft Close hinges**	Yes
N. of fans	1	**Soft Open**	Yes
No. of lights	2	**Chimney**	Fixed
Light type	Halogen	**Cooling system**	Tangential
User-replaceable light	Yes	**Cooling duct**	Double
Light Power	40 W	**Speed Reduction Cooling System**	Yes
Light when door is opened	Yes	**Door Lock During Pyrolisis**	Yes

Lower heating element power	1200 W
Grill element - power	1750 W
Circular heating element - Power	2000 W
Heating suspended when door is opened	Yes
Door opening type	Standard opening
Door	Cool
Steam range	20 - 40%
Usable cavity space dimensions (HxWxD)	353x470x401 mm
Temperature control	Electronic
Cavity material	Ever clean Enamel
Water loading	Drawer, manual
Tank capacity	0,8 l

Performance / Energy Label



Energy efficiency class	A+
Net volume of the cavity	68 l
Energy consumption per cycle in conventional mode	1.09 kWh
Energy consumption in conventional mode	3.92 MJ
Energy consumption in forced air convection	2.45 MJ
Energy consumption per cycle in fan-forced convection	0.68 kWh
Number of cavities	1
Energy efficiency index	81 %

Accessories Included

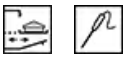

Rack with back stop	1
Enamelled tray (20mm)	1
Enamelled deep tray (50mm)	1
Insert gird	1
Telescopic Guide rails, partial Extraction	1
Temperature probe	Yes, single point

Electrical Connection

Voltage	220-240 V
Plug	(I) Australia
Current	13 A
Nominal power	3000 W
Frequency (Hz)	50/60 Hz
Power supply cable length	150 cm

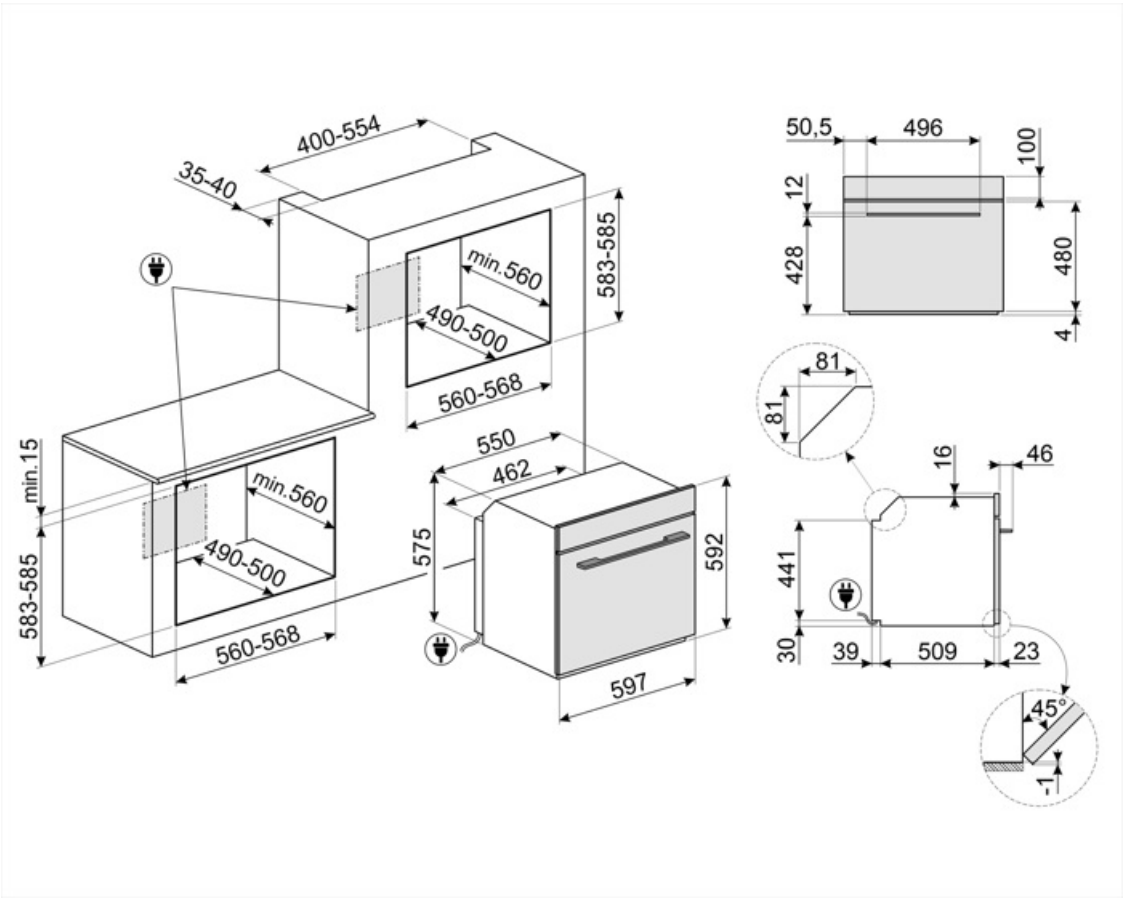
400-554
35-40
583-585
min.560
490-500
560-568
min.15
583-585
min.560
490-500
560-568
550
462
575
592
597
50,5
496
100
12
428
480
4
81
81
16
46
441
30
39
509
23
45°
1

Compatible Accessories



AIRFRY2

Air fryer tray. Ideal for recreating traditional frying in the oven, but with fewer calories and less fat. It allows you to cook quickly and simply dishes such as French fries, fried vegetables and fish, ensuring perfect browning and crispiness.



ET20

Enamelled tray, 20mm deep



GTP2

Partially extractable telescopic guides (1 level), suitable for traditional ovens. Made in stainless steel, they guarantee stability and facilitate the smooth extraction of the trays.



GTTV2

Totally extractable telescopic guides (1 level), suitable for steam ovens. Made in stainless steel, they guarantee stability and facilitate the smooth extraction of the trays.



PR3845X

Antifingerprint stainless steel. Cover for furniture in column installation of more ovens



BBQ

Double sided plate BBQ. Suitable for recreating succulent and crispy dishes in the oven with the typical taste of grilled cooking. The ribbed side is particularly suitable for meats and cheeses. The smooth side for fish, seafood and vegetables.



ET50

Enamelled tray, 50mm deep



GTT2

Totally extractable telescopic guides (1 level), suitable for traditional ovens. Made in stainless steel, they guarantee stability and facilitate the smooth extraction of the trays.



PALPZ

Pizza shovel with fold away handle width: 315mm length : 325mm



STONE2

Rectangular pizza stone without handles, suitable for 45cm and 60cm wide ovens. Dimensions W42 x H1.8 x D37.5cm. Ideal for cooking pizzas with the same results as a typical wood-fired oven. Can also be used for baking bread, focaccias and other recipes such as pies, flans or biscuits

Alternative products



SOPA6302S2PN

Matte black

Symbols glossary



Dedicated cooking function for the double sided plate BBQ. Suitable for recreating succulent and crispy dishes in the oven with the typical taste of g



Child lock: some models are fitted with a device to lock the programme/cycle so it cannot be accidentally changed.



Combination steam: ovens can be used either as a steam oven, or as a traditional oven, or alternatively the two methods can be combined.



Defrost by time: with this function the time of thawing of foods are determined automatically.



The new EVOscreen display is enhanced with new, optimised colour graphics: 5 touch buttons control functions and parameters in an extremely simple way.



Automatic lighting switches off: for greater energy savings, the lighting switches off automatically after one minute from the start of cooking.



Enamel interior: The enamel interior of all Smeg ovens have a special antacid lining which helps keep the interior clean by reducing the amount of cooking grease adhering to it.



Fan with upper and lower elements: The elements combined with the fan aim to provide more uniform heat, a similar method to conventional cooking, so pre-heat is required. Most suitable for items requiring slow cooking methods.



Lower heating element only: This function is ideal for foods that require extra base temperature without browning, e.g. pastry dishes, pizza. Also suitable for slow cooking of stews and casseroles.



Manual water loading system: It is possible to load the tank in less than 40 seconds. The loading is done manually thanks to a special funnel included.



A+: Energy efficiency class A+ helps to save up to 10% energy compared to class A. Maximum performance with minimum consumption is guaranteed.



Air cooling system: to ensure a safe surface temperatures.



Descaling function: Is essential to remove excess deposits of limestone in the tank and allow the proper operation of the product. The need to perform this operation is signaled by the product itself.



Quadruple glazed: Number of glazed doors.



Electric



Fresh Touch: Most of Smeg ovens have a "cool door." Thanks to the combination of tangential cooling and internal heat-reflecting glasses, the temperature on the outer surface of the door is maintained below 50° C. In addition to providing safety, this system protects the sides of the furniture from overheating by the oven.



Upper and lower element only: a traditional cooking method best suited for single items located in the centre of the oven. the top pf the oven will always be hottest. Ideal for roast, fruit cakes, bread etc.



Circulaire: The combination of the fan and circular element around it gives a hot air cooking method. This provides many benefits including no preheat if cook time is more than 20 minutes, no flavour transfer when cooking different foods at the same time, less energy, and shorter cook times. Good for all types of food.

ECO: The combination of the grill, fan and lower element is particularly suitable for cooking small quantities of food.

Grill element: Using of grill gives excellent results when cooking meat of medium and small portions, especially when combined with a rotisserie (where possible). Also ideal for cooking sausages and bacon.

Pizza function: The simultaneous operation of three elements ensures an optimum cooking facility when used with the Smeg pizza stone.

Fan combined with traditional cooking, where heat is generated from above and below, provides uniform heat. Adding the steam function allows the same cooking results in less time.

Circulaire element with steam: Cooking with the simultaneous use of the circular heating element in combination with fan and steam supply.

FUN_STEAM_OTHER_WATER_IN_OUT_72dpi

Circulaire with upper and lower elements: The use of the fan with both elements allows food to be cooked quickly and effectively, ideal for large joints that require thorough cooking. It offers a similar result to rotisserie, moving the heat around the food, instead of moving the food itself, enabling any size or shape to be cooked.

All glass inner door: All glass inner door, a single flat surface which is simple to keep clean.

The inner door glass: can be removed with a few quick movements for cleaning.

KEEP_WARM_72dpi

Side lights: Two opposing side lights increase visibility inside the oven.

Pyrolitic: Pyrolitic cleaning cycles can be selected as necessary to automatically clean the oven interior.

Cooking with temperature probe: It is possible to display the temperature detected by the probe and set a target temperature that the dish must reach. When the core of the dish reaches the desired temperature, cooking stops

Air at 40°C provides the perfect environment for proving yeast type dough mixes. Simply select the function and place dough in the cavity for allotted

Rapid preheat: The rapid preheat function can be used to reach the selected temperature in just a few minutes.

Sabbath: This function allows you to cook food during the Sabbath, the Holiday of rest in the Jewish religion, respecting the precepts. The oven works

The oven cavity has 5 different cooking levels.

Soft close: all models are equipped with advanced function of smooth closing of the door, which allows the device to close smoothly and quietly.

To guarantee the optimal functioning of the appliance, it is suggested to carry out the tank cleaning roughly once every 2-3 months.

Telescopic rails: allow you to pull out the dish and check it without having to remove it from the oven entirely.

Electronic control: Allows you to maintain temperature inside the oven with the precision 2-3 ° C. This enables to cook meals that are very sensitive to temperature changes, such as cakes, souffles, puddings.

The capacity indicates the amount of usable space in the oven cavity in litres.

The capacity indicates the amount of usable space in the oven cavity in litres.

Dedicated cooking function for the Air fryer rack AIRFRY . Ideal for recreating traditional frying in the oven, but with fewer calories and less fat.



Dedicated cooking function for the rectangular refractory stone PPR2 Dimensions Ideal for cooking pizzas with the same results as a typical wood-fire