SOPU3304TPX



Category	30"
Product Family	Oven
Power supply	Electric
Heat source	ELECTRICITY
Cooking method	Thermo-ventilated
Cleaning system	Pyrolitic
EAN code	8017709339388

Aesthetics

Aesthetic	SPR	**Glass Type**	Eclipse
Colour	Stainless steel	**Door**	With 2 horizontal strips
Finishing	Fingerproof	**Handle**	SPR US
Design	Flat	**Handle Colour**	Inox
Material	Stainless steel	**Logo**	Embossed
Type of steel	Brushed		

Controls

Display name	VivoScreen	**No. of display languages**	7
Display technology	TFT		
Control setting	Advanced full touch	**Display languages**	Italiano, English (US), Français (CA), Español (MX), Português (PT), zh-CHS, zh-CHT

Programs / Functions

No. of cooking functions	9
Automatic programmes	50
Customisable recipes	16

Traditional cooking functions

- Static
- Fan assisted
- Circulaire
- Turbo
- Eco
- Large grill
- Fan grill (large)
- Base
- Circulaire + bottom
- Pizza

Other functions

- Defrost by time
- Defrost by weight
- Leavening
- Stone cooking
- BBQ
- Air-Fry
- Keep warm
- Plate rack/warmer
- Sabbath

Cleaning functions

- Pirolysis

Sabbath Mode	Yes

Options

Time-setting options	Delay start and automatic end cooking	**Cooking with probe thermometer**	Yes
Minute minder	Yes	**Smart cooking**	Yes
Timer	2	**Showroom demo option**	Yes
Controls Lock / Child Safety	Yes	**Chronology**	Yes, the last 10 functions utilized
Other options	Keep warm, Eco light, Language setting, Digital clock display, Tones	**Rapid pre-heating**	Yes

Technical Features

Capacity (Lt)	111 l	**Circular heating element - Power**	2000 W
Cavity	Altro	**Heating suspended when door is opened**	Yes
Minimum Temperature	86 °F	**Door opening type**	Standard opening
Maximum temperature	280 °F	**Door**	Cool
No. of shelves	6	**Removable door**	Yes
N. of fans	1	**Full glass inner door**	Yes
No. of lights	2	**Total no. of door glasses**	4
Light type	Halogen		
User-replaceable light	Yes		

Light Power	40 W
Light when door is opened	Yes
Lower heating element power	1700 W
Upper heating element - Power	1200 W
Grill element - power	1700 W
Large grill - Power	2900 W
Cooling system	Tangential
Cooling duct	Double
Speed Reduction Cooling System	Yes
Door Lock During Pyrolisis	Yes
Usable cavity space dimensions (HxWxD)	442x585x437 mm
Temperature control	Electronic
Cavity material	Ever clean Enamel

Performance / Energy Label



Energy efficiency class	A
Net volume of the cavity	3.92 cu. ft.
Energy consumption per cycle in conventional mode	1,00 kWh
Energy consumption in conventional mode	3,60 MJ
Energy consumption in forced air convection	3,06 MJ
Energy consumption per cycle in fan-forced convection	0,85 kWh
Number of cavities	1
Energy efficiency index	83,3 %

Accessories Included




Rack with back stop	3
Enamelled deep tray (40mm)	1
Insert gird	1
Telescopic Guide rails, total Extraction	2
Temperature probe	Yes, single point

Electrical Connection

Voltage	120/240 V
Plug	Cable with free ends
Nominal power	5900 W
Voltage 2	120/208 V
Current 2	20 A
Frequency (Hz)	60 Hz
Power supply cable length	59 1/16 "

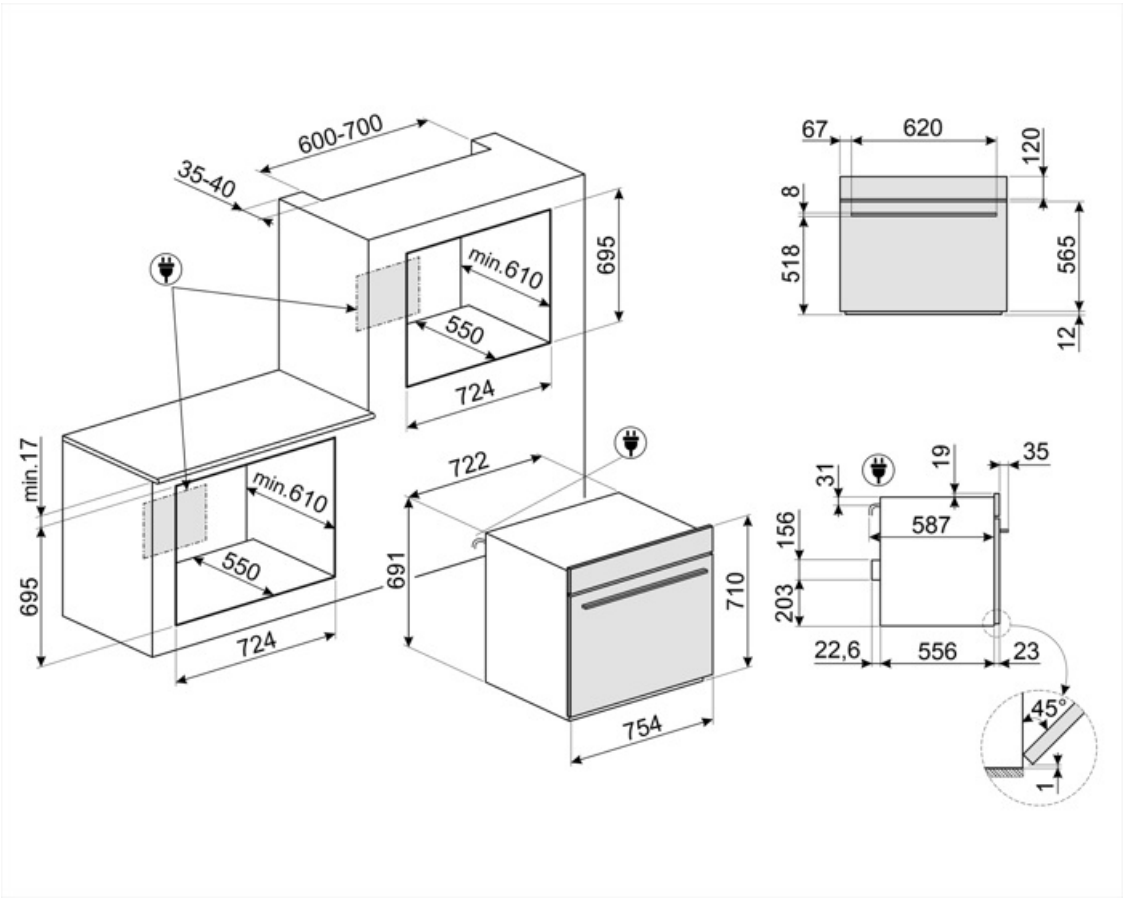
600-700
35-40
min.610
695
550
724
min.17
min.610
550
695
724
722
691
710
754
67
620
120
8
518
565
12
31
19
35
587
156
203
22,6
556
23
45°
1

Compatible Accessories



AIRFRY2

Air fryer tray. Ideal for recreating traditional frying in the oven, but with fewer calories and less fat. It allows you to cook quickly and simply dishes such as French fries, fried vegetables and fish, ensuring perfect browning and crispiness.



GT3T

Totally extractable telescopic guides



STONE2

Rectangular pizza stone without handles, suitable for 45cm and 60cm wide ovens. Dimensions W42 x H1.8 x D37.5cm. Ideal for cooking pizzas with the same results as a typical wood-fired oven. Can also be used for baking bread, focaccias and other recipes such as pies, flans or biscuits



AIRFRY30



PALPZ

Pizza shovel with folding handle. Dimensions L31.5 x H32.5 cm. Easy and convenient to use and store. Perfect for serving pizza, bread and savory pastries in a safe and professional way.

Alternative products



SOPU3104TPG

Neptune Grey

Symbols glossary



Dedicated cooking function for the double sided plate BBQ. Suitable for recreating succulent and crispy dishes in the oven with the typical taste of grilled cooking. The ribbed side is particularly suitable for meats and cheeses; the smooth side for fish, seafood and vegetables.



A: Product drying performance, measured from A+++ to D / G depending on the product family



Defrost by time: Manual defrost function. At the end of the set duration, the function stops.



The 4.3" VIVOscreen display offers an advanced colour touch interface, for automatic management of firing programmes such as Delta T, Multi-step and SameTime firing.



Automatic lighting deactivation: For greater energy savings, the lighting turns off automatically after one minute from the start of cooking The option can be disabled via the settings menu. In this case the light will remain on for the entire duration of cooking.



Ever Clean Enamel: Ever Clean enamel is applied electrostatically, corner to corner and edge to edge to prevent cracking or cracks over time. It is a particular pyrolytic enamel, resistant to acids which, in addition to being pleasantly bright, promotes greater cleaning of the oven walls, thanks to its lower porosity. It is baked at over 850 ° C and slowly polymerized at a scientifically determined rate to ensure uniform depth and strength Ever Clean enamel creates an impeccable finish both on the inside of the oven and on the trays, making the surfaces of the oven incredibly easy to maintain over time as it reduces the adhesion of fat during cooking



Dedicated cooking function for the Air fryer rack AIRFRY . Ideal for recreating traditional frying in the oven, but with fewer calories and less fat. It allows you to cook quickly and simply dishes such as French fries, fried vegetables and fish, ensuring perfect browning and crispiness.



Child lock: some models are fitted with a device to lock the programme/cycle so it cannot be accidentally changed.



Air cooling system: to ensure a safe surface temperatures.



Defrost by weight: Automatic defrost function. You choose the type of food to defrost from the available categories (MEAT - FISH - BREAD - DESSERTS) After entering the weight of the food, the oven automatically defines the time required for proper defrosting.



Quadruple glazed: Number of glazed doors.



Electric



Fresh Touch: Most of Smeg ovens have a "cool door." Thanks to the combination of tangential cooling and internal heat-reflecting glasses, the temperature on the outer surface of the door is maintained below 50° C. In addition to providing safety, this system protects the sides of the furniture from overheating by the oven.



Fan assisted: Intense and homogeneous traditional cooking, also suitable for complex recipes. The fan is active and the heat comes from below and from above at the same time. Ventilated cooking ensures a faster and more homogeneous result, leaving fragrant foods outside and moister inside. Ideal for baked pasta, biscuits, roasts and cobblers.

Static: Traditional cooking suitable for the preparation of one dish at a time. The fan is not active and the heat comes from below and from above at the same time. Static cooking is slower and more delicate, ideal in order to get well cooked and dry dishes even inside. Ideal for cooking all types of roasts, fatty meats, bread, filled cakes.

Circulaire with lower element: The addition of the lower element adds extra heat at the base for food which requires extra cooking.

ECO: low energy consumption cooking: this function is particularly suitable for cooking on a single shelf with low energy consumption. It is recommended for all types of food except those that can generate a lot of moisture (for example vegetables). To achieve maximum energy savings and reduce time, it is recommended to put the food in the oven without preheating the cooking compartment

Fan grill: very intense heat coming only from above from a double heating element The fan is active. It allows the optimal grilling of thickest meats. Ideal for large cuts of meat.

Pizza function: Specific function for cooking pizza in a pan. It allows to obtain a pizza that is soft inside and crispy outside with the topping perfectly cooked, not dry and not burnt.

All glass inner door: All glass inner door, a single flat surface which is simple to keep clean.

Side lights: Two opposing side lights increase visibility inside the oven.

Base: the heat comes only from the bottom of the cavity. The fan is not active. Ideal for sweet and savory pies, cobblers and pizzas. Designed to complete cooking and make food more crunchy This symbol in gas ovens indicates the gas burner.

Circulaire: it is the perfect function for cooking all types of dishes in a more delicate way. The heat comes from the back of the oven and is distributed quickly and evenly The fan is active. It is also ideal for cooking on multiple levels without mixing smells and flavors.

Grill: Very intense heat coming only from above from a double heating element. The fan is not active. Provides excellent grilling and gratinating results. Used at the end of cooking, it gives a uniform browning to dishes.

Keep warm: the function allows to keep cooked food warm.

Turbo: the heat comes from 3 directions: above, below and from the back of the oven The fan is active. It allows quick cooking, even on several shelves without mixing the aromas. Ideal for large volumes or foods that require intense cooking.

KEEP_WARM_72dpi

PYROLYSIS - AUTOMATIC CLEANING FUNCTION: the oven heats up to a temperature approaching 500 ° C and chars grease and food residues into a fine ash that can be easily wiped off with a damp cloth. At such a high temperature, the door locks automatically for safety, while the temperature of the door remains controlled so it is safe to touch User adjustable function based on the level of dirt present in the oven.



Plate rack warming: function for heating or keeping dishes warm. Place the baking tray on the lowest shelf and stack the dishes to be heated.



Temperature probe: with the temperature probe it is possible to perfectly cooking roasts, loins, meat of various cuts and sizes. In fact, the probe improve food cooking, thanks to the precise control of the temperature at the heart of the dish. The core temperature of the food is measured by a special sensor located inside the tip. When the instant temperature reaches the target temperature set by the user, cooking is finished



Air at 40°C provides the perfect environment for proving yeast type dough mixes. Simply select the function and place dough in the cavity for allotted



Rapid preheating: cooking is preceded by the preheating phase which allows the cooking compartment to reach the set temperature. This option reduces the time by up to 50%.



SABBATH: function that allows to cook food respecting Judaism's day of rest provisions.



The oven cavity has 6 different cooking levels.



Smart Cooking is the perfect recipe for every occasion. Meat, fish, pasta, desserts, etc . up to 150 automatic recipes that allow to make any preparation in a single click. Decide your menu and then the oven takes care of the rest.



Telescopic rails: allow you to pull out the dish and check it without having to remove it from the oven entirely.



Electronic control: Allows you to maintain temperature inside the oven with the precision 2-3 ° C. This enables to cook meals that are very sensitive to temperature changes, such as cakes, souffles, puddings.



Dedicated cooking function for the rectangular refractory stone PPR2 Dimensions Ideal for cooking pizzas with the same results as a typical wood-fired oven. Can also be used for baking bread, focaccias and other recipes such as pies, flans or biscuits