SOU2104TG



Category	24''
Product Family	Oven
Power supply	Electric
Heat source	ELECTRICITY
Cooking method	Thermo-ventilated
Cleaning system	Vapor Clean
EAN code	8017709342869

Aesthetics

Aesthetic	Linea	**Serigraphy colour**	Black
Colour	Neptune Grey	**Serigraphy type**	Symbols
Design	Flat	**Door**	Full glass
Material	Glass	**Handle**	Neptune 24'' BIG
Type of steel	Brushed	**Handle Colour**	Inox
Glass Type	Clear	**Logo**	Silk screen

Controls

Display name	VivoScreen	**No. of display languages**	8
Display technology	TFT		
Control setting	Full touch	**Display languages**	Italiano, English (US), Français (CA), Español (MX), Português (PT), zh-CHS, zh-CHT

Programs / Functions

No. of cooking functions	9
Automatic programmes	50
Customisable recipes	16

Traditional cooking functions

- Static
- Fan assisted
- Circulaire
- Turbo
- Eco
- Large grill
- Fan grill (large)
- Circulaire + grill
- Base
- Fan assisted base
- Pizza

Other functions

- Defrost by time
- Defrost by weight
- Leavening
- Stone cooking
- BBQ
- Air-Fry
- Keep warm
- Plate rack/warmer
- Sabbath

Cleaning functions

- Vapor Clean

Sabbath Mode	Yes

Options

Time-setting options	Delay start and automatic end cooking	**Smart cooking**	Yes
Minute minder	Yes	**Showroom demo option**	Yes
Timer	2	**Chronology**	Yes, the last 10 functions utilized
Controls Lock / Child Safety	Yes	**Rapid pre-heating**	Yes
Other options	Keep warm, Eco light, Language setting, Digital clock display, Tones		

Technical Features

Capacity (Lt)	72 l	**Circular heating element - Power**	2000 W
Cavity	Sares	**Heating suspended when door is opened**	Yes
Minimum Temperature	86 °F	**Door opening type**	Standard opening
Maximum temperature	280 °F	**Door**	Cool
No. of shelves	5	**Removable door**	Yes
N. of fans	1	**Full glass inner door**	Yes
No. of lights	2	**Removable inner door**	Yes
Light type	Halogen		
User-replaceable light	Yes		

Light Power	40 W
Light when door is opened	Yes
Lower heating element power	1200 W
Upper heating element - Power	1000 W
Grill element - power	1700 W
Large grill - Power	2700 W
Total no. of door glasses	4
Soft Close hinges	Yes
Cooling system	Tangential
Cooling duct	Single
Speed Reduction Cooling System	Yes
Usable cavity space dimensions (HxWxD)	360x460x425 mm
Temperature control	Electronic
Cavity material	Ever clean Enamel

Performance / Energy Label



Energy efficiency class	A
Net volume of the cavity	2.54 cu. ft.
Energy consumption per cycle in conventional mode	1.00 kWh
Energy consumption in conventional mode	3.60 MJ
Energy consumption in forced air convection	3.06 MJ
Energy consumption per cycle in fan-forced convection	0.85 kWh
Number of cavities	1
Energy efficiency index	100 %

Accessories Included



Rack with back stop	2
Enamelled deep tray (40mm)	1
Insert gird	1
Telescopic Guide rails, partial Extraction	1

Electrical Connection

Voltage	120/240 V
Plug	Cable with free ends
Nominal power	3400 W
Voltage 2	120/208 V
Current 2	13 A
Frequency (Hz)	60 Hz
Power supply cable length	59 1/16 "

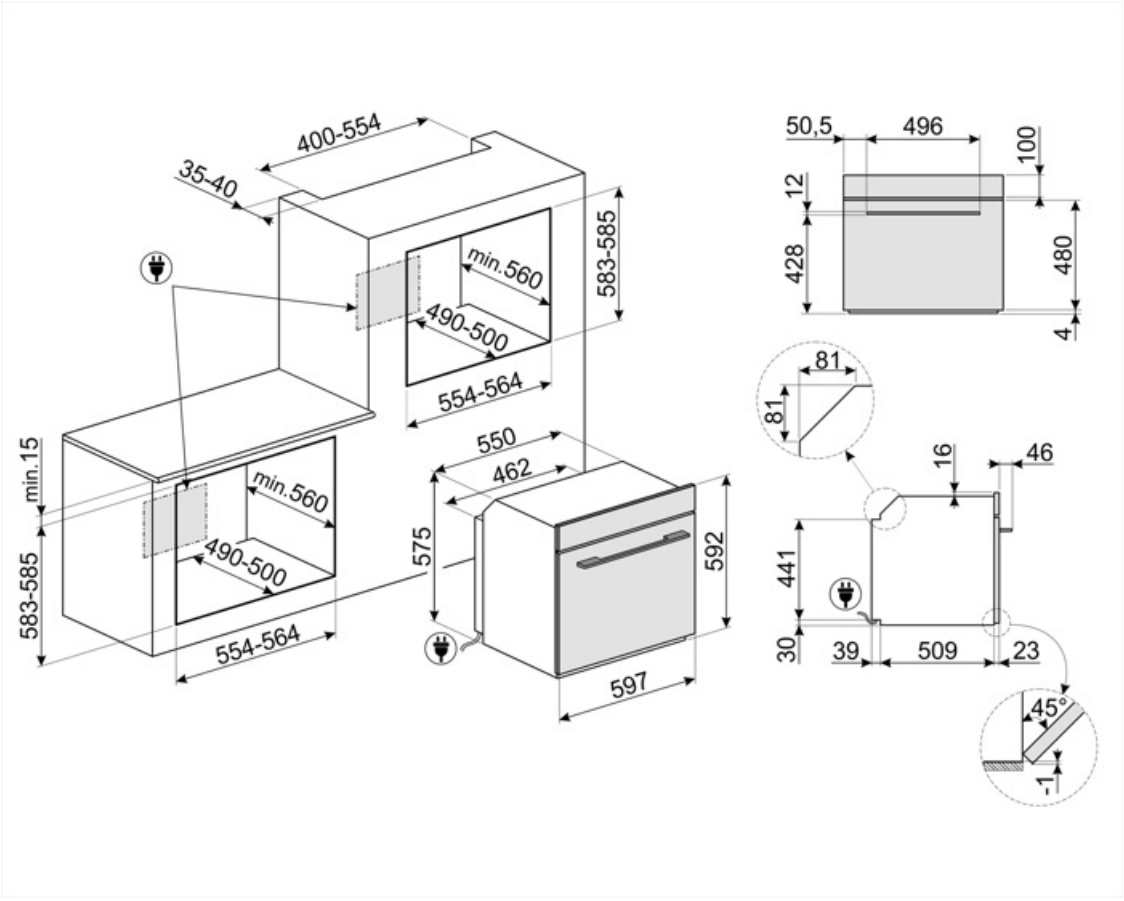
400-554
35-40
min.560
490-500
583-585
554-564
min.15
583-585
min.560
490-500
554-564
550
462
575
592
597
50,5
496
100
12
428
480
4
81
81
16
46
441
30
39
509
23
45°
1

Compatible Accessories



AIRFRY2

Air fryer tray. Ideal for recreating traditional frying in the oven, but with fewer calories and less fat. It allows you to cook quickly and simply dishes such as French fries, fried vegetables and fish, ensuring perfect browning and crispiness.



BN640

Enamelled tray suitable for 45cm and 60cm ovens. Depth 540 mm. Perfect for cooking and roasting meat and fish in sauces. Also ideal for experimenting with lighter and crunchy side dishes



GTT

Totally extractable telescopic guides (1 level), suitable for traditional ovens. Made in stainless steel, they guarantee stability and facilitate the smooth extraction of the trays.



STONE2

Rectangular pizza stone without handles, suitable for 45cm and 60cm wide ovens. Dimensions W42 x H1.8 x D37.5cm. Ideal for cooking pizzas with the same results as a typical wood-fired oven. Can also be used for baking bread, focaccias and other recipes such as pies, flans or biscuits



BN620-1

Enamelled tray suitable for 45cm and 60cm ovens. Depth 20 mm. Perfect for a wide range of savoury and sweet baking.



GTP

Partially extractable telescopic guides (1 level), suitable for traditional ovens. Made in stainless steel, they guarantee stability and facilitate the smooth extraction of the trays.



PALPZ

Pizza shovel with folding handle. Dimensions L31.5 x H32.5 cm. Easy and convenient to use and store. Perfect for serving pizza, bread and savory pastries in a safe and professional way.

Alternative products



SOU2304TX

Stainless steel

Symbols glossary



Dedicated cooking function for the double sided plate BBQ. Suitable for recreating succulent and crispy dishes in the oven with the typical taste of grilled cooking. The ribbed side is particularly suitable for meats and cheeses; the smooth side for fish, seafood and vegetables.



A: Product drying performance, measured from A+++ to D / G depending on the product family



Defrost by time: Manual defrost function. At the end of the set duration, the function stops.



The 4.3" VIVOscreen display offers an advanced colour touch interface, for automatic management of firing programmes such as Delta T, Multi-step and SameTime firing.



Automatic lighting deactivation: For greater energy savings, the lighting turns off automatically after one minute from the start of cooking The option can be disabled via the settings menu. In this case the light will remain on for the entire duration of cooking.



Ever Clean Enamel: Ever Clean enamel is applied electrostatically, corner to corner and edge to edge to prevent cracking or cracks over time. It is a particular pyrolytic enamel, resistant to acids which, in addition to being pleasantly bright, promotes greater cleaning of the oven walls, thanks to its lower porosity. It is baked at over 850 ° C and slowly polymerized at a scientifically determined rate to ensure uniform depth and strength Ever Clean enamel creates an impeccable finish both on the inside of the oven and on the trays, making the surfaces of the oven incredibly easy to maintain over time as it reduces the adhesion of fat during cooking



Dedicated cooking function for the Air fryer rack AIRFRY . Ideal for recreating traditional frying in the oven, but with fewer calories and less fat. It allows you to cook quickly and simply dishes such as French fries, fried vegetables and fish, ensuring perfect browning and crispiness.



Child lock: some models are fitted with a device to lock the programme/cycle so it cannot be accidentally changed.



Air cooling system: to ensure a safe surface temperatures.



Defrost by weight: Automatic defrost function. You choose the type of food to defrost from the available categories (MEAT - FISH - BREAD - DESSERTS) After entering the weight of the food, the oven automatically defines the time required for proper defrosting.



Quadruple glazed: Number of glazed doors.



Electric



Fresh Touch: Most of Smeg ovens have a "cool door." Thanks to the combination of tangential cooling and internal heat-reflecting glasses, the temperature on the outer surface of the door is maintained below 50° C. In addition to providing safety, this system protects the sides of the furniture from overheating by the oven.



Fan assisted base: the mix of fan and lower heating element alone allows to finish cooking foods already cooked on the surface but not internally more quickly. This system is recommended to finish cooking foods that are already well cooked on the surface, but not internally, which therefore require a moderate higher heat. Ideal for any type of food.

Fan assisted: Intense and homogeneous traditional cooking, also suitable for complex recipes. The fan is active and the heat comes from below and from above at the same time. Ventilated cooking ensures a faster and more homogeneous result, leaving fragrant foods outside and moister inside. Ideal for baked pasta, biscuits, roasts and cobblers.

Base: the heat comes only from the bottom of the cavity. The fan is not active. Ideal for sweet and savory pies, cobblers and pizzas. Designed to complete cooking and make food more crunchy This symbol in gas ovens indicates the gas burner.

Circulaire: it is the perfect function for cooking all types of dishes in a more delicate way. The heat comes from the back of the oven and is distributed quickly and evenly The fan is active. It is also ideal for cooking on multiple levels without mixing smells and flavors.

Grill: Very intense heat coming only from above from a double heating element. The fan is not active. Provides excellent grilling and gratinating results. Used at the end of cooking, it gives a uniform browning to dishes.

Pizza function: Specific function for cooking pizza in a pan. It allows to obtain a pizza that is soft inside and crispy outside with the topping perfectly cooked, not dry and not burnt.

All glass inner door: All glass inner door, a single flat surface which is simple to keep clean.

KEEP_WARM_72dpi

Plate rack warming: function for heating or keeping dishes warm. Place the baking tray on the lowest shelf and stack the dishes to be heated.

Rapid preheating: cooking is preceded by the preheating phase which allows the cooking compartment to reach the set temperature. This option reduces the time by up to 50%.

Static: Traditional cooking suitable for the preparation of one dish at a time. The fan is not active and the heat comes from below and from above at the same time. Static cooking is slower and more delicate, ideal in order to get well cooked and dry dishes even inside. Ideal for cooking all types of roasts, fatty meats, bread, filled cakes.

Circulaire + grill: Circulaire with upper element or grill: Similar to fan with upper element with the added cooking speed of circulaire, ideal for dishes with a crispy topping. When used with the grill the food will brown more quickly.

ECO: low energy consumption cooking: this function is particularly suitable for cooking on a single shelf with low energy consumption. It is recommended for all types of food except those that can generate a lot of moisture (for example vegetables). To achieve maximum energy savings and reduce time, it is recommended to put the food in the oven without preheating the cooking compartment

Fan grill: very intense heat coming only from above from a double heating element The fan is active. It allows the optimal grilling of thickest meats. Ideal for large cuts of meat.

Turbo: the heat comes from 3 directions: above, below and from the back of the oven The fan is active. It allows quick cooking, even on several shelves without mixing the aromas. Ideal for large volumes or foods that require intense cooking.

The inner door glass: can be removed with a few quick movements for cleaning.

Side lights: Two opposing side lights increase visibility inside the oven.

Air at 40°C provides the perfect environment for proving yeast type dough mixes. Simply select the function and place dough in the cavity for allotted

SABBATH: function that allows to cook food respecting Judaism's day of rest provisions.

The oven cavity has 5 different cooking levels.

Soft close: all models are equipped with advanced function of smooth closing of the door, which allows the device to close smoothly and quietly.

Electronic control: Allows you to maintain temperature inside the oven with the precision 2-3 ° C. This enables to cook meals that are very sensitive to temperature changes, such as cakes, souffles, puddings.

Vapor Clean: a simple cleaning function using steam to loosen deposits in the oven cavity.

The capacity indicates the amount of usable space in the oven cavity in litres.

Dedicated cooking function for the rectangular refractory stone PPR2 Dimensions Ideal for cooking pizzas with the same results as a typical wood-fired oven. Can also be used for baking bread, focaccias and other recipes such as pies, flans or biscuits

Smart Cooking is the perfect recipe for every occasion. Meat, fish, pasta, desserts, etc . up to 150 automatic recipes that allow to make any preparation in a single click. Decide your menu and then the oven takes care of the rest.

Telescopic rails: allow you to pull out the dish and check it without having to remove it from the oven entirely.

Touch controls: Easy to use touch controls allow the appliance to be programmed at the touch of a button.

The capacity indicates the amount of usable space in the oven cavity in litres.

Keep warm: the function allows to keep cooked food warm.