SPD516

Tipo	Undercounter traywasher
Louça	Louça; Talheres; EN 600x400 trays; GN1/1 trays
Dimensões do cesto	500x500 mm
Painel de comandos	Controlo eletrónico da temperatura
Standard drain pump with partial water renewal in the wash tank	Sim
Bomba de enxaguamento	HTR system
Tipo de caldeira	Atmosferic boiler
Bomba de lavagem	Standard
Ligação energética	400 V 3N~ / 12 A / 7,3 kW / 50 Hz
Dimensões do produto (LxPxA)	600x690x822 mm



Mercado

Indústrias	Hotelaria, Restaurantes / Catering, Padarias / Pastelarias, Estabelecimentos de Cuidados, Catering, Indústrias Alimentares, Talhos

Design

Cor dos LEDs	**Design**	Easyline

Especificações técnicas

Trays number	7 x GN1/1; 6 x EN 600x400
Opção de lavagem dos tabuleiros	Sim
Consumo de água por ciclo	3,2 l
Temperatura de lavagem (mín-máx)	60 °C
Temperatura de enxaguamento (mín.-máx.)	71 °C - 85 °C
Temperatura de enxaguamento a frio	No
Temperatura pré-definida de ligação da água	5°C
Consumo mínimo de água por ciclo	3,2 l
Temperatura máxima de entrada:	60°C
Dureza máxima da água	5°f - 3°dH
Pressão de entrada	100-1000 kPa (min-max)
Carga de detergente	1,5 l/h
Carga de enxaguamento	0,4 l/h
Altura de carga operável	400 mm
Profundidade com porta aberta	1020 mm

Programas

Programas	6 programas automáticos; 1 fully customizable program; Programas de autolimpeza
Opções do programa	Enxaguamento extra, Ciclo da água limpa
Tabela de programas	Easyline dishwasher, glasswasher and traywasher 500
Numero máximo de cestos/hora	60
Numero máximo de pratos/hora	1080
Numero máximo de copos/hora	2160

Ligação elétrica

Potência do elemento de aquecimento do tanque	2000 W
Potência do elemento de aquecimento da caldeira	6100 W
Potência da bomba de lavagem	700 W
Ligação pré-definida	7300 W
Ligação eléctrica opcional	220 V 3~ / 19 A / 6,8 kW / 60 Hz; 220 V 3~ / 19 A / 7,3 kW / 60 Hz; 230 V~ / 15 A / 3,4 kW / 50 Hz ; 230 V~ / 17 A / 3.9 kW / 50 Hz; 230 V~ / 20 A / 4,5 kW / 50 Hz ; 230 V~ / 22 A / 5,0 kW / 50 Hz; 400 V 3N~ / 12 A / 6,8 kW / 50 Hz
Potential equalisation	Yes
Ficha elétrica	Não

Interface

Display	8 dígitos
Luz indicadora On/Off	Sim
Alerta de falta de abrilhantador	Sim
Alerta de falta de detergente	Sim
Indicador da fase do programa	Sim
Indicador de fim do programa	Sim
Diagnóstico manual	Sim

ESPECIFICAÇÕES TÉCNICAS

Cuba	Profundo
Tipologia	Parede dupla
Material da cuba	Aço inox AISI 304
Painel traseiro	St/steel
Porta equilibrada	Sim
Sistema de lavagem superior	Um braço de lavagem e um braço de enxaguamento dividido, em aço inoxidável.
Sistema de lavagem inferior	One wash and one split rinse spray arms, stainless steel
Filtro da cuba	Aço inox
Junta da porta	Em 3 lados
Guias dos cestos	Embutidas
Filtro	Sistema de filtragem de 5 estágios
Capacidade da cuba	11 l
Capacidade da caldeira	6,5 l
Ruído	Lpa 54,5 dBA
Classe de Proteção	IPX4
Pés ajustáveis	Sim
Altura max. de drenagem	600 mm
Power cable length	180 cm

Acessórios incluídos

Cesto para pratos	1x PB50D01
Cesto para tabuleiros	1x WB50T03

Cesto para talheres	1x PHOOS04	**Mangueira de abastecimento de água**	Sim - 2m
Cesto de fundo plano	1x PB50G02		
Grelhas	1 x KIT-WG500	**Mangueira de drenagem**	Sim - 2m

Equipamentos

Dispensador peristáltico de detergente	Controlo eletrónico	**Opção para ativação automática diária**	Sim, desligado por definição
Dispensador peristáltico de abrilhantador	Controlo eletrónico	**Contador de ciclos**	Sim
Sonda de nível químico	Sim, opcional KITSONLIV	**Tanque de Ruptura**	Sim
Unidade de medida da dosagem de produtos químicos	gr/lt	**Diâmetro do tudo de abastecimento de água**	DN15 - ½”
Sistema Thermostop para caldeira de enxaguamento	Yes - default	**Ø do tubo de drenagem**	DN20-G 3/4"
Sistema Thermostop no tanque de lavagem	Sim	**Comprimento da mangueira de detergente (vermelha)**	2,2 m
Sistema de arranque suave da bomba de lavagem	Sim	**Comprimento da mangueira de enxaguamento (azul)**	2,2 m
Sistema Stand-by	Sim		

Dados de logística

Código EAN	8017709344887	**Peso líquido (kg)**	68,000 kg
Dimensões do produto embalado (LxPxA)	660x700x990 mm	**Peso bruto (kg)**	76,000 kg

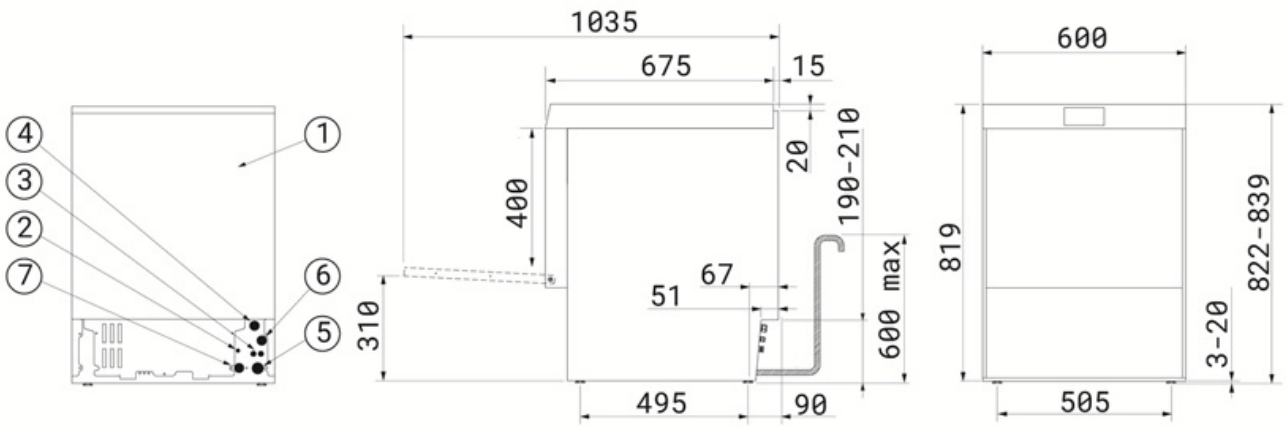

1	PANNELLO RETRO - LOWER BACK PANEL
2	MORSETTO EQUIPOTENZIALE - EARTH TERMINAL
3	TUBI POMPE PERISTALTICHE - PERISTALTIC HOSES
4	CAVO ALIMENTAZIONE ELETTRICA - ELECTRICITY SUPPLY CABLE
5	TUBO DI SCARICO - DRAIN HOSE
6	ENTRATA CAVO DI ALIMENTAZIONE DOSATORE ESTERNO - EXTERNAL DISPENSER POWER CABLE ENTRY POINT
7	TUBO DI CARICO - FILLER HOSE

Acessórios Compatíveis



KITSONLIV

Probe level kit

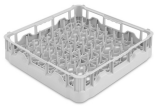

PB50D01

Polypropylene basket for 18 plates Ø250 mm max, dim.(WxDxH) 500x500x105 mm

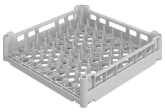

PB50T01

Polypropylene basket for 8 trays GN 1/1 h 40 mm for traywasher and hood-type models. Vertical row spacing 68 mm and horizontal row spacing 54 mm, dim. (WxDxH) 500x500x105 mm



PHOOS01

Polypropylene single basket for cutlery



WB50PG5

Wire basket with flat bottom for 25 plastic glasses, max. H 230 mm, min.-max. Ø 36-95 mm, dim. (WxDxH) 500x500x260 mm



WB50T03

Wire basket for 6 trays GN1/1 h 60 mm and EN 600x400 mm for double-skin model. 64 mm row spacing, dim. (WxDxH) 500x500x206 mm



WS5

Estrutura inferior para máquina de lavar copos e máquina de lavar louça 500



KIT-WG500

Support grid for tray washer, dim. (WxD) 500x500 mm

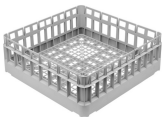

PB50G02

Universal flat bottom polypropylene basket, internal height 150 mm, dim. (WxDxH) 500x500x170 mm



PHOOGR5

Tilted glass insert for basket PB50G02 500x500 mm, configurable with 4 units of 5 glasses each (first line Ø max 110 mm, lines 2-4 Ø max 95 mm), or 5 units of 5 glasses each (forst line Ø max 95 mm, lines 2-5 Ø max 75 mm)



PHOOS04

4 compartments polypropylene basket for cutlery



WB50T02

Wire basket for 7 trays GN1/1 h 20 mm, dim. (WxD) 500x500 mm



WH00S01

Wire insert for 17 small dishes, width 100 mm, for flat bottom baskets 500x500 and 600x500 mm

Benefit (TT)

Balanced door

Effortless opening and closing

The counterbalanced door is designed to ensure smooth and effortless opening and closing, providing high user convenience. Additionally, it can be locked in a halfway position, a particularly useful feature for promoting natural drying at the end of the workday, enhancing overall hygiene and preventing the buildup of residual moisture.

5-stage system

Deep cleaning and spotless washes with the patented filtration system

The innovative Smeg filtration system consists of 5 stages to completely eliminate all impurities: the 1st stage captures larger food residues; in the 2nd and 3rd stages, finer particles are captured at this filtration stage; the 4th stage features a pre-filtration grid to prevent debris from entering the tank and clouding the water. Finally, the last stage is designed to further protect the washing and draining pumps from any debris that may accidentally enter the tank during filter cleaning.

HTR System

Consistent temperatures and pressures for uniform and effective dishwashing

Thanks to the HTR system (High Temperature Rinse) and the presence of the atmospheric boiler combined with the Thermostop, the cold inlet water does not enter the boiler during rinsing, ensuring a constant rinsing temperature according to the program setting. The HTR system keeps the water hot for deep sanitisation and quick drying, ensuring constant pressure for uniform and effective cleaning.

Moulded tank

Superior washing performance and enhanced cleaning convenience with molded tub bottoms and basket guides

Smeg dishwashers are designed with moulded tank and basket guides. The absence of sharp edges ensures an optimised wash flow, guaranteeing hygiene and impeccable cleaning performance. Furthermore, this innovative design simplifies machine cleaning, reducing the need for maintenance interventions.

Integral double-skin

Thermal and acoustic insulation guaranteed

The double-skin design of undercounter dishwashers is engineered to optimise energy efficiency by minimising heat loss and accelerating water heating, resulting in lower energy consumption and faster start-up times. Additionally, it provides effective sound insulation, helping to reduce noise levels and ensuring a quieter, more comfortable working environment for staff.

Drain pump

Partial water replacement during the wash cycle for clean and hygienic dishes

The standard drain pump, equipped with a partial water exchange system, ensures that the dirtiest water is automatically removed at every wash cycle. This mechanism allows for continuous renewal of the water used, ensuring that each phase of the washing process is carried out with clean water. The result is optimal dishwashing performance, with outstanding efficiency and an impeccable level of hygiene.

Soft-start system

Effective management of the washing pump to protect your glassware

The Soft-Start function initiates the wash cycle gently and gradually, progressively increasing the water pressure. This system has been designed to provide optimal protection for the most fragile items, such as crystal glasses, significantly reducing the risk of chipping or damage. At the same time, it ensures excellent cleaning performance, combining efficiency and safety in every wash cycle.

Euronorm

Compatibility with EN 600x400 mm trays

These models offer great versatility, with the ability to wash up to 6 Euronorm 600x400 mm trays. These features make the products extremely useful for a wide range of activities, such as pizzerias, bakeries, bistros, catering, restaurants, and cafés.