SPG400ML

Type	Undercounter glasswashers
Crockery	Crockery; Glasses; Cutlery
Basket dimensions	400x400 mm
Control panel	Mechanical
Standard drain pump with partial water renewal in the wash tank	Yes
Boiler type	Pressure boiler
Wash pump	Standard
Power connection	230 V~ / 13 A / 3,0 kW / 50 Hz
Product dimensions (WxDxH)	440x555x670 mm



Aesthetics

Led color	**Series**	Ecoline

Technical Features

Water consumption per cycle	3 l
Wash temperature (min-max)	60 °C
Rinse temperature (min-max)	83 °C
Min. water connection temperature	5°C
Minimum water consumption per cycle	3 l
Max. inlet temperature	60°C
Max water hardness	5°f - 3°dH
Inlet pressure	250-1000 kPa (min-max)
Detergent load	1,5 l/h
Rinse load	0,4 l/h
Usable load height	309 mm
Depth with open door	882 mm

Programs

Programs	2 automatic programs; Self-cleaning programs
Program table	Mechanical Ecoline glasswasher
Maximum basket/hour	40
Maximum dishes/hour	320
Maximum glasses/hour	1000

Electrical Connection

Tank heating element power	2000 W	**Default connection**	3000 W
Boiler heating element power	2700 W	**Potential equalisation**	Yes
Wash pump power	290 W	**Plug**	(F;E) Schuko

Interface

Number of buttons	4	**On/Off button**	Yes

Construction

Tank	Deep drawn	**Filter**	4-stage filter system
Construction	Partial double-skin	**Tank capacity**	7 l
Tank material	Stainless steel AISI 304	**Boiler capacity**	4.5 l
Back panel	St/steel	**Noise**	Lpa 52,6 dBA
Upper wash system	One wash and one split rinse spray arms, stainless steel	**Protection class**	IPX4
		Adjustable feet	Yes
		Drain max. height	600 mm
Lower wash system	One wash and one combined rinse spray arms, stainless steel and plastic	**Power cable length**	180 cm
Tank filter	Plastic		
Door gasket	Only up		
Rack guides	Embossed		

Accessories included

Cutlery basket	1x PHOOS01	**Water supply hose**	Yes - 1,5 m
Flat basket	2x PB40G01	**Drain hose**	Yes - 2m

Equipments

Peristaltic detergent dispenser	Manual	**Wash pump soft start system**	Yes
Peristaltic rinse-aid dispenser	Manual	**Water supply pipe diameter**	DN15 - ½”
Deafult chemicals dosing unit of measure	gr/lt	**Drain supply pipe diameter**	DN20-G 3/4"
Rinse boiler Thermostop system	Yes - default	**Detergent (red) hose length**	2,2 m
Wash tank Thermostop system	Yes	**Rinse aid (blue) hose length**	2,2 m

Logistic Information

EAN code	8017709346232	**Net weight**	41.000 kg
Packed product dimensions (WxDxH)	510x630x820 mm	**Gross weight**	47.000 kg

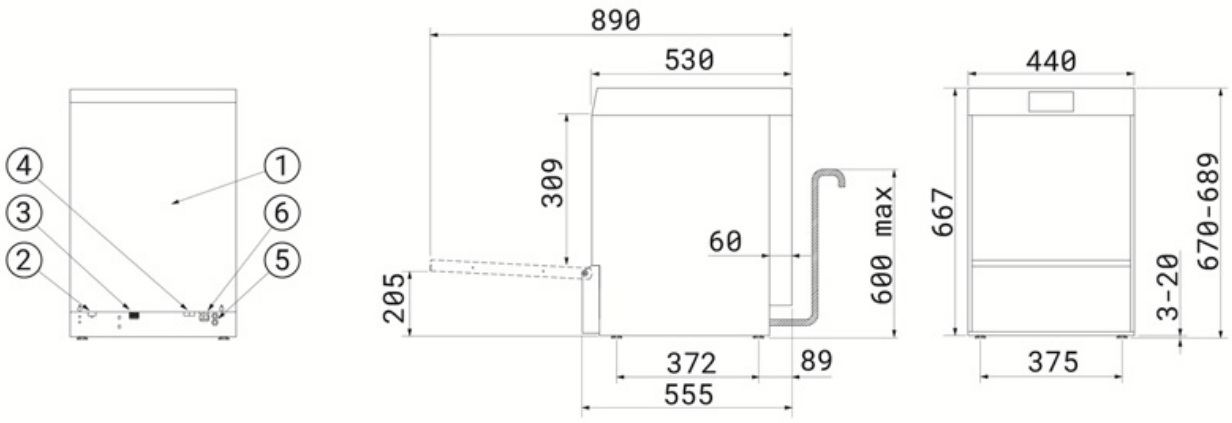

1	PANNELLO RETRO - LOWER BACK PANEL
2	MORSETTO EQUIPOTENZIALE - EARTH TERMINAL
3	TUBO DI CARICO - FILLER HOSE
4	TUBO DI SCARICO - DRAIN HOSE
5	TUBI POMPE PERISTALTICHE - PERISTALTIC HOSES
6	CAVO ALIMENTAZIONE ELETTRICA - ELECTRICITY SUPPLY CABLE

Compatible Accessories

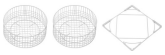

KITRB40G01

Set of 2 universal wire baskets with flat bottom, size (ØxH) 400x140 mm, and adapter for 400x400 glasswasher models

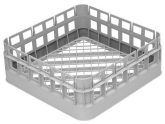

PB40G01

Universal flat bottom polypropylene basket, internal height 125 mm, dim. (WxDxH) 400x400x146 mm



PHOOS01

Polypropylene single basket for cutlery



RB40G01

Universal wire basket with flat bottom, dim. (ØxH) 400x140 mm

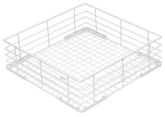

WB40G01

Universal wire basket with flat bottom, internal height 110 mm, dim (WxDxH) 400x400x120 mm



WB40G03

Sloped bottom wire basket for 9 glasses Ø95 mm max, dim. (WxDxH) 400x400x168 mm



WH00S01

Wire insert for 17 small dishes, width 100 mm, for flat bottom baskets 500x500 and 600x500 mm



PB40C02

Universal flat bottom polypropylene double basket, 20 small dishes upper basket, internal height lower basket 120 mm, dim.(WxDxH) 400x400x227 mm



PHOOGR4

Tilted glass holder insert, configurable with up to 4 units of 4 glasses each, for PB40G01 basket 400x400 mm



RB40A3

Adapter for round basket RB40G01 for 400x400 glasswashers models



WB40D01

Wire basket for 8 dishes Ø315 mm max, dim. (WxD) 400x400 mm



WB40G02

Wire basket with sloped bottom for glasses 16 Ø90 mm max, dim. (WxDxH) 400x400x168 mm

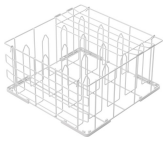

WB40PG4

Wire basket for 16 plastic glasses, max. H 180 mm, min.-max. Ø 36-95 mm, dim. (WxDxH) 400x400x210 mm



WS4

Stainless steel underframe for undercounter glasswashers 400 mm, dim. (WxDxH) 495x530x490 mm

Benefit (TT)

4-stage filtration system

Deep cleaning and spotless washes with the Patented 4-Stages Filtration System

The innovative Smeg filtration system consists of 4 stages to completely eliminate all impurities: the 1st stage captures larger food residues; in the 2nd stages, finer particles are captured at this filtration stage; the 3th stage features a pre-filtration grid to prevent debris from entering the tank and clouding the water. Finally, the last stage is designed to further protect the washing and draining pumps from any debris that may accidentally enter the tank during filter cleaning.

Moulded tank

Superior washing performance and enhanced cleaning convenience with molded tub bottoms and basket guides

Smeg dishwashers are designed with moulded tank and basket guides. The absence of sharp edges ensures an optimised wash flow, guaranteeing hygiene and impeccable cleaning performance. Furthermore, this innovative design simplifies machine cleaning, reducing the need for maintenance interventions.

Partial double-skin

Optimised thermal and acoustic insulation

The Ecoline undercounter dishwashers are equipped with a partial double-skin structure that optimises energy efficiency by minimising heat loss. Additionally, it provides effective acoustic insulation, helping to reduce noise levels and ensuring a quieter, more comfortable working environment for staff.

Drain pump

Partial water replacement during the wash cycle for clean and hygienic dishes

The standard drain pump, equipped with a partial water exchange system, ensures that the dirtiest water is automatically removed at every wash cycle. This mechanism allows for continuous renewal of the water used, ensuring that each phase of the washing process is carried out with clean water. The result is optimal dishwashing performance, with outstanding efficiency and an impeccable level of hygiene.

Soft-start system

Effective management of the washing pump to protect your glassware

The Soft-Start function initiates the wash cycle gently and gradually, progressively increasing the water pressure. This system has been designed to provide optimal protection for the most fragile items, such as crystal glasses, significantly reducing the risk of chipping or damage. At the same time, it ensures excellent cleaning performance, combining efficiency and safety in every wash cycle.

Mechanical Interface

Control panel with mechanical buttons

The mechanical version is equipped with 4 buttons: one for powering the appliance on and off, one for starting the wash cycle, one for selecting the cycle, and a button for draining the tank and initiating the final self-cleaning. The panel also includes two indicator lights that provide important information, such as low salt levels and the boiler status.