SPG400MSL

Tipo	Undercounter glasswashers
Louça	Louça; Copos; Talheres
Dimensões do cesto	400x400 mm
Painel de comandos	Controlo mecânico da temperatura
Standard drain pump with partial water renewal in the wash tank	Sim
Tipo de caldeira	Caldeira de pressão
Bomba de lavagem	Standard
Ligação energética	230 V~ / 13 A / 3,0 kW / 50 Hz
Dimensões do produto (LxPxA)	440x555x670 mm



Design

Cor dos LEDs	**Design**	Ecoline

Especificações técnicas

Consumo de água por ciclo	3 l
Temperatura de lavagem (mín-máx)	60 °C
Temperatura de enxaguamento (mín.-máx.)	83 °C
Temperatura de enxaguamento a frio	No
Temperatura pré-definida de ligação da água	5°C
Consumo mínimo de água por ciclo	3 l
Temperatura máxima de entrada:	60°C
Dureza máxima da água	60°f - 34°dH
Pressão de entrada	250-1000 kPa (min-max)
Carga de detergente	1,5 l/h
Carga de enxaguamento	0,4 l/h
Altura de carga operável	309 mm
Profundidade com porta aberta	882 mm

Programas

Programas	2 programas automáticos; Programas de autolimpeza
Tabela de programas	Mechanical Ecoline glasswasher
Numero máximo de cestos/hora	40
Numero máximo de pratos/hora	320
Numero máximo de copos/hora	1000

Ligação elétrica

Potência do elemento de aquecimento do tanque	2000 W
Potência do elemento de aquecimento da caldeira	2700 W
Potência da bomba de lavagem	290 W
Ligação pré-definida	3000 W
Potential equalisation	Yes
Ficha elétrica	(F;E) Schuko

Interface

Numero de botões	4
Luz indicadora On/Off	Sim
Luz indicadora de falta de sal	Sim

ESPECIFICAÇÕES TÉCNICAS

Cuba	Profundo
Tipologia	Parede dupla parcial
Material da cuba	Aço inox AISI 304
Painel traseiro	St/steel
Sistema de lavagem superior	Um braço de lavagem e um braço de enxaguamento dividido, em aço inoxidável.
Sistema de lavagem inferior	Um braço de lavagem e um braço de enxaguamento combinado, em aço inoxidável e plástico.
Filtro da cuba	Plástico
Junta da porta	Apenas para cima
Guias dos cestos	Embutidas
Filtro	Sistema de filtragem em 4 fases
Capacidade da cuba	7 l
Capacidade da caldeira	4,5 l
Ruído	Lpa 52,6 dBA
Classe de Proteção	IPX4
Pés ajustáveis	Sim
Altura max. de drenagem	600 mm
Power cable length	180 cm

Acessórios incluídos

Cesto para talheres	1x PHOOS01
Cesto de fundo plano	2x PB40G01
Mangueira de abastecimento de água	Sim - 1,5m
Mangueira de drenagem	Sim - 2m

Equipamentos

Dispensador peristáltico de detergente	Manual
Dispensador peristáltico de abrilhantador	Manual
Unidade de medida da dosagem de produtos químicos	gr/lt
Amaciador automático incorporado	Sim
Sistema de arranque suave da bomba de lavagem	Sim
Diâmetro do tudo de abastecimento de água	DN15 - ½”
Ø do tubo de drenagem	DN20-G 3/4"
Comprimento da mangueira de detergente (vermelha)	2,2 m

Sistema Thermostop para caldeira de enxaguamento	Yes - default	**Comprimento da mangueira de enxaguamento (azul)**	2,2 m
Sistema Thermostop no tanque de lavagem	Sim		

Dados de logística

Código EAN	8017709346300	**Peso líquido (kg)**	43,000 kg
Dimensões do produto embalado (LxPxA)	510x630x820 mm	**Peso bruto (kg)**	49,000 kg

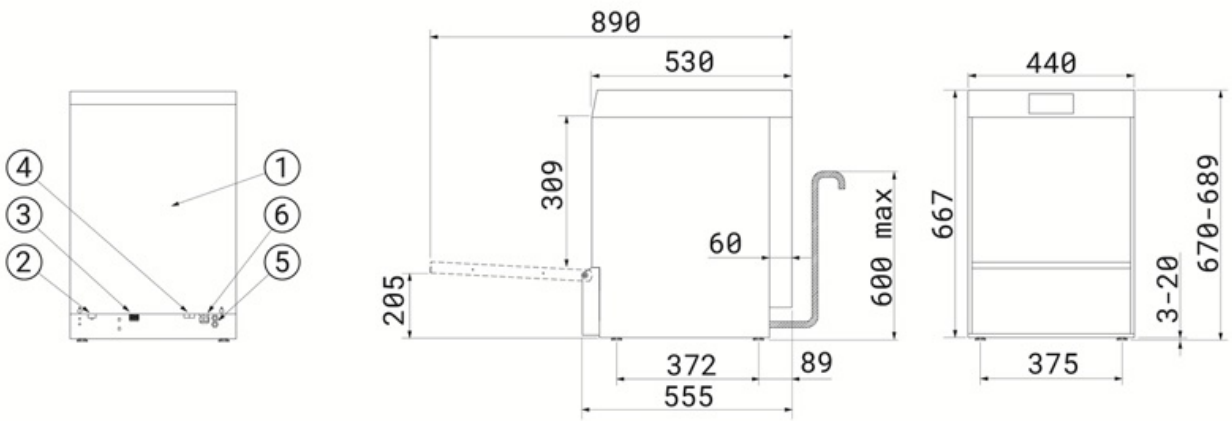

1	PANNELLO RETRO - LOWER BACK PANEL
2	MORSETTO EQUIPOTENZIALE - EARTH TERMINAL
3	TUBO DI CARICO - FILLER HOSE
4	TUBO DI SCARICO - DRAIN HOSE
5	TUBI POMPE PERISTALTICHE - PERISTALTIC HOSES
6	CAVO ALIMENTAZIONE ELETTRICA - ELECTRICITY SUPPLY CABLE

Acessórios Compatíveis

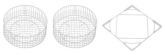

KITRB40G01

Set of 2 universal wire baskets with flat bottom, size (ØxH) 400x140 mm, and adapter for 400x400 glasswasher models

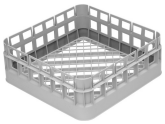

PB40G01

Universal flat bottom polypropylene basket, internal height 125 mm, dim. (WxDxH) 400x400x146 mm



PHOOS01

Polypropylene single basket for cutlery



RB40G01

Universal wire basket with flat bottom, dim. (ØxH) 400x140 mm

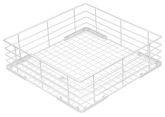

WB40G01

Universal wire basket with flat bottom, internal height 110 mm, dim (WxDxH) 400x400x120 mm



WB40G03

Sloped bottom wire basket for 9 glasses Ø95 mm max, dim. (WxDxH) 400x400x168 mm



WH00S01

Wire insert for 17 small dishes, width 100 mm, for flat bottom baskets 500x500 and 600x500 mm



PB40C02

Universal flat bottom polypropylene double basket, 20 small dishes upper basket, internal height lower basket 120 mm, dim.(WxDxH) 400x400x227 mm



PHOOGR4

Tilted glass holder insert, configurable with up to 4 units of 4 glasses each, for PB40G01 basket 400x400 mm

RB40A3



Adapter for round basket RB40G01 for 400x400 glasswashers models

WB40D01



Wire basket for 8 dishes Ø315 mm max, dim. (WxD) 400x400 mm

WB40G02



Wire basket with sloped bottom for glasses 16 Ø90 mm max, dim. (WxDxH) 400x400x168 mm

WB40PG4

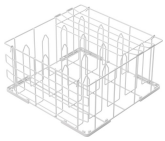

Wire basket for 16 plastic glasses, max. H 180 mm, min.-max. Ø 36-95 mm, dim. (WxDxH) 400x400x210 mm



WS4

Estrutura inferior para máquina de lavar copos 400

Benefit (TT)

4-stage filtration system

Deep cleaning and spotless washes with the Patented 4-Stages Filtration System

The innovative Smeg filtration system consists of 4 stages to completely eliminate all impurities: the 1st stage captures larger food residues; in the 2nd stages, finer particles are captured at this filtration stage; the 3th stage features a pre-filtration grid to prevent debris from entering the tank and clouding the water. Finally, the last stage is designed to further protect the washing and draining pumps from any debris that may accidentally enter the tank during filter cleaning.

Moulded tank

Superior washing performance and enhanced cleaning convenience with molded tub bottoms and basket guides

Smeg dishwashers are designed with moulded tank and basket guides. The absence of sharp edges ensures an optimised wash flow, guaranteeing hygiene and impeccable cleaning performance. Furthermore, this innovative design simplifies machine cleaning, reducing the need for maintenance interventions.

Integrated softener

Effective water treatment for consistently sparkling glasses

The integrated continuous regeneration water softener ensures effective water treatment, enhancing washing performance and preserving the machine's operational lifespan. The resin regeneration process takes place during the wash cycle without interruptions, providing constant control over water hardness. This system prevents limescale buildup, maximises detergent efficiency, and guarantees spotless results on glassware and dishes.

Partial double-skin

Optimised thermal and acoustic insulation

The Ecoline undercounter dishwashers are equipped with a partial double-skin structure that optimises energy efficiency by minimising heat loss. Additionally, it provides effective acoustic insulation, helping to reduce noise levels and ensuring a quieter, more comfortable working environment for staff.

Drain pump

Partial water replacement during the wash cycle for clean and hygienic dishes

The standard drain pump, equipped with a partial water exchange system, ensures that the dirtiest water is automatically removed at every wash cycle. This mechanism allows for continuous renewal of the water used, ensuring that each phase of the washing process is carried out with clean water. The result is optimal dishwashing performance, with outstanding efficiency and an impeccable level of hygiene.

Soft-start system

Effective management of the washing pump to protect your glassware

The Soft-Start function initiates the wash cycle gently and gradually, progressively increasing the water pressure. This system has been designed to provide optimal protection for the most fragile items, such as crystal glasses, significantly reducing the risk of chipping or damage. At the same time, it ensures excellent cleaning performance, combining efficiency and safety in every wash cycle.

Mechanical Interface

Control panel with mechanical buttons

The mechanical version is equipped with 4 buttons: one for powering the appliance on and off, one for starting the wash cycle, one for selecting the cycle, and a button for draining the tank and initiating the final self-cleaning. The panel also includes two indicator lights that provide important information, such as low salt levels and the boiler status.