SPG515SL

Type	Undercounter glasswashers
Crockery	Crockery; Glasses; Cutlery
Basket dimensions	500x500 mm
Control panel	Electronic
Standard drain pump with partial water renewal in the wash tank	Yes
Rinse pump	HTR system
Boiler type	Atmosferic boiler
Wash pump	Standard
Power connection	400 V 3N~ / 12 A / 6,7 kW / 50 Hz
Product dimensions (WxDxH)	600x600x722 mm



Target

Industries	Bar / Cafeterias / Bistros / Wine bars / Pubs, Hotels, Restaurants, Bakeries / Pastry shops, Commercial food services

Aesthetics

Led color	**Series**	Easyline

Technical Features

Water consumption per cycle	3,2 l
Wash temperature (min-max)	60 °C
Rinse temperature (min-max)	71 °C - 85 °C
Min. water connection temperature	5°C
Minimum water consumption per cycle	3,2 l
Max. inlet temperature	60°C
Max water hardness	60°f - 34°dH
Inlet pressure	100-1000 kPa (min-max)
Detergent load	1,5 l/h
Rinse load	0,4 l/h
Usable load height	300 mm
Depth with open door	925 mm
Maximum dishes diameter	300 mm

Programs

Programs	6 automatic programs; 1 fully customizable program; Self-cleaning programs
Program options	Extra rinse, Clean water cycle
Program table	Easyline dishwasher, glasswasher and traywasher 500
Maximum basket/hour	60
Maximum dishes/hour	1080
Maximum glasses/hour	2160

Electrical Connection

Tank heating element power	2000 W
Boiler heating element power	6100 W
Wash pump power	700 W
Default connection	6800 W
Optional electrical connection	230 V 3~ / 19 A / 7,3 kW / 50 Hz; 230 V 3~ / 19 A / 6,8 kW / 50 Hz ; 230 V~ / 15 A / 3,4 kW / 50 Hz ; 230 V~ / 17 A / 3.9 kW / 50 Hz; 230 V~ / 20 A / 4,5 kW / 50 Hz ; 230 V~ / 22 A / 5,0 kW / 50 Hz; 400 V 3N~ / 12 A / 6,8 kW / 50 Hz
Potential equalisation	Yes
Plug	Not present

Interface

Display	8 digit
Number of buttons	5
On/Off button	Yes
Salt alert	Yes
Rinse aid missing alert	Yes
Detergent missing alert	Yes
Cycle progress alert	Yes
End-cycle alert	Yes
Manual diagnostic	Yes

Construction

Tank	Deep drawn
Construction	Integral double-skin
Tank material	Stainless steel AISI 304
Back panel	St/steel
Balanced door	Yes
Upper wash system	One wash and one split rinse spray arms, stainless steel
Lower wash system	One wash and one split rinse spray arms, stainless steel
Tank filter	Stainless steel
Door gasket	On 3 sides
Rack guides	Embossed
Filter	5-stage filter system
Tank capacity	11 l
Boiler capacity	6,5 l
Noise	Lpa 54,5 dBA
Protection class	IPX4
Adjustable feet	Yes
Drain max. height	600 mm
Power cable length	180 cm

Accessories included

Flat basket	1x WB50G02
Water supply hose	Yes - 1,5 m
Drain hose	Yes - 2m

Equipments

Peristaltic detergent dispenser	Electronic control	**Option for auto daily switch on**	Yes, default OFF
Peristaltic rinse-aid dispenser	Electronic control	**Cycle counter**	Yes
Automatic built softener	Yes	**Water supply pipe diameter**	DN15 - ½”
Rinse boiler Thermostop system	Yes - default	**Drain supply pipe diameter**	DN20-G 3/4"
Wash tank Thermostop system	Yes	**Detergent (red) hose length**	2,2 m
Wash pump soft start system	Yes	**Rinse aid (blue) hose length**	2,2 m
Stand-by system	Yes		

Logistic Information

EAN code	8017709340858	**Net weight**	61,000 kg
Packed product dimensions (WxDxH)	660x700x890 mm	**Gross weight**	68,000 kg

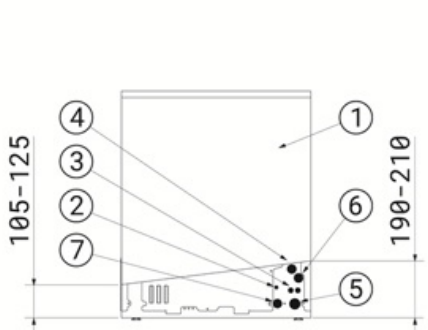

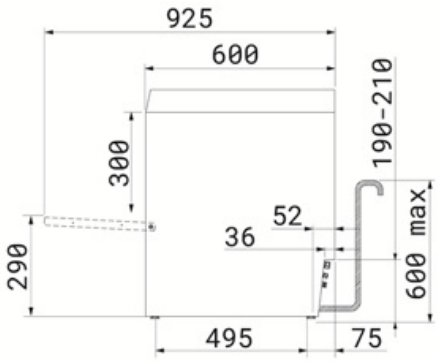

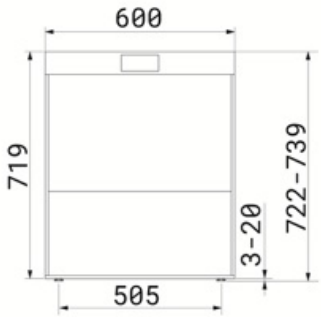

1	PANNELLO RETRO - LOWER BACK PANEL
2	MORSETTO EQUIPOTENZIALE - EARTH TERMINAL
3	TUBI POMPE PERISTALTICHE - PERISTALTIC HOSES
4	CAVO ALIMENTAZIONE ELETTRICA - ELECTRICITY SUPPLY CABLE
5	TUBO DI SCARICO - DRAIN HOSE
6	ENTRATA CAVO DI ALIMENTAZIONE DOSATORE ESTERNO - EXTERNAL DISPENSER POWER CABLE ENTRY POINT
7	TUBO DI CARICO - FILLER HOSE

Compatible Accessories



KITSONLIV

Probe level kit



PHOOS01

Polypropylene single basket for cutlery



WH00S01

Wire insert for 17 small dishes, width 100 mm, for flat bottom baskets 500x500 and 600x500 mm

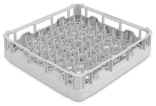

PB50D01

Polypropylene basket for 18 plates Ø250 mm max, dim.(WxDxH) 500x500x105 mm



WB50PG5

Wire basket with flat bottom for 25 plastic glasses, max. H 230 mm, min.-max. Ø 36-95 mm, dim. (WxDxH) 500x500x260 mm



WS5

Stainless steel underframe for undercounter glasswashers and dishwashers 500 mm, dim. (WxDxH) 595x595x490 mm

Benefit (TT)

Balanced door

Effortless opening and closing

The counterbalanced door is designed to ensure smooth and effortless opening and closing, providing high user convenience. Additionally, it can be locked in a halfway position, a particularly useful feature for promoting natural drying at the end of the workday, enhancing overall hygiene and preventing the buildup of residual moisture.

5-stage system

Deep cleaning and spotless washes with the patented filtration system

The innovative Smeg filtration system consists of 5 stages to completely eliminate all impurities: the 1st stage captures larger food residues; in the 2nd and 3rd stages, finer particles are captured at this filtration stage; the 4th stage features a pre-filtration grid to prevent debris from entering the tank and clouding the water. Finally, the last stage is designed to further protect the washing and draining pumps from any debris that may accidentally enter the tank during filter cleaning.

HTR System

Consistent temperatures and pressures for uniform and effective dishwashing

Thanks to the HTR system (High Temperature Rinse) and the presence of the atmospheric boiler combined with the Thermostop, the cold inlet water does not enter the boiler during rinsing, ensuring a constant rinsing temperature according to the program setting. The HTR system keeps the water hot for deep sanitisation and quick drying, ensuring constant pressure for uniform and effective cleaning.

Moulded tank

Superior washing performance and enhanced cleaning convenience with molded tub bottoms and basket guides

Smeg dishwashers are designed with moulded tank and basket guides. The absence of sharp edges ensures an optimised wash flow, guaranteeing hygiene and impeccable cleaning performance. Furthermore, this innovative design simplifies machine cleaning, reducing the need for maintenance interventions.

Integrated softener

Effective water treatment for consistently sparkling glasses

The integrated continuous regeneration water softener ensures effective water treatment, enhancing washing performance and preserving the machine's operational lifespan. The resin regeneration process takes place during the wash cycle without interruptions, providing constant control over water hardness. This system prevents limescale buildup, maximises detergent efficiency, and guarantees spotless results on glassware and dishes.

Integral double-skin

Thermal and acoustic insulation guaranteed

The double-skin design of undercounter dishwashers is engineered to optimise energy efficiency by minimising heat loss and accelerating water heating, resulting in lower energy consumption and faster start-up times. Additionally, it provides effective sound insulation, helping to reduce noise levels and ensuring a quieter, more comfortable working environment for staff.

Drain pump

Partial water replacement during the wash cycle for clean and hygienic dishes

The standard drain pump, equipped with a partial water exchange system, ensures that the dirtiest water is automatically removed at every wash cycle. This mechanism allows for continuous renewal of the water used, ensuring that each phase of the washing process is carried out with clean water. The result is optimal dishwashing performance, with outstanding efficiency and an impeccable level of hygiene.

Soft-start system

Effective management of the washing pump to protect your glassware

The Soft-Start function initiates the wash cycle gently and gradually, progressively increasing the water pressure. This system has been designed to provide optimal protection for the most fragile items, such as crystal glasses, significantly reducing the risk of chipping or damage. At the same time, it ensures excellent cleaning performance, combining efficiency and safety in every wash cycle.