SPG525SL

Type	Undercounter glasswashers
Crockery	Crockery; Glasses; Cutlery
Basket dimensions	500x500 mm
Control panel	Touch screen
Standard drain pump with partial water renewal in the wash tank	Yes
Rinse pump	Self-Adaptive HTR+
Boiler type	Atmosferic boiler
Wash pump	Variable speed AdaptWash
Power connection	400 V 3N~ / 15 A / 8,4 kW / 50 Hz
Product dimensions (WxDxH)	600x600x722 mm



Target

Industries	Bar / Cafeterias / Bistros / Wine bars / Pubs, Hotels, Restaurants, Bakeries / Pastry shops, Commercial food services

Aesthetics

Led color	**Series**	Pura

Technical Features

Water consumption per cycle	2,5 l
Wash temperature (min-max)	60 °C - 70 °C
Rinse temperature (min-max)	65 °C - 87 °C
Cold rinse temperature	24 °C
Min. water connection temperature	5°C
Minimum water consumption per cycle	1,8 l
Max. inlet temperature	60°C
Max water hardness	60°f - 34°dH
Inlet pressure	100-1000 kPa (min-max)
Detergent load	1,5 l/h
Rinse load	0,4 l/h
Usable load height	300 mm
Depth with open door	925 mm
Maximum dishes diameter	300 mm
Maximum glasses height	300 mm

Programs

Programs	10 customizable programs; Self-cleaning programs
Program options	Extra rinse, Clean water cycle
Program table	Pura glasswasher 500
Program visibility	Yes
Maximum basket/hour	45
Maximum dishes/hour	810
Maximum glasses/hour	1620

Connectivity

SmegConnect Pro	Yes
Connectivity	Wi-Fi
PST certificate support period [UK]	24 months
UK PSTI support period end date	2027-12-31

Electrical Connection

Tank heating element power	2000 W
Boiler heating element power	5700 W
Wash pump power	700 W
Default connection	8400 W
Optional electrical connection	230 V 3~ / 19 A / 6,7 kW / 50 Hz; 230 V~ / 12 A / 2,7 kW / 50 Hz; 230 V~ / 16 A / 3,7 kW / 50 Hz; 230 V~ / 21 A / 4,7 kW / 50 Hz
Potential equalisation	Yes
Plug	Not present

Interface

Display	TFT Touch 4.3"
On/Off button	Yes
Salt alert	Yes
Rinse aid missing alert	Yes
Detergent missing alert	Yes
Cycle progress alert	Yes
End-cycle alert	Yes
Manual diagnostic	Yes

Construction

Tank	Deep drawn
Construction	Integral double-skin
Tank material	Stainless steel AISI 304
Back panel	St/steel
Balanced door	Yes
Upper wash system	One wash and one split rinse spray arms, stainless steel
Lower wash system	One wash and one split rinse spray arms, stainless steel
Tank filter	Stainless steel
Door gasket	On 3 sides
Rack guides	Embossed
Hood elevation system	Manual
Filter	5-stage filter system
Tank capacity	11 l
Boiler capacity	6.5 l
Noise	Lpa 54,5 dBA
USB port	Yes
Protection class	IPX4
Adjustable feet	Yes
Drain max. height	1000 mm
Power cable length	180 cm

Accessories included

Flat basket	1x WB50G02	**Drain hose**	Yes - 2m
Water supply hose	Yes - 2 m		

Equipments

Peristaltic detergent dispenser	Electronic control	**Option for auto daily switch on**	Yes, default OFF
Peristaltic rinse-aid dispenser	Electronic control	**Cycle counter**	Yes
Chemicals level probe	Yes, with optional kit KITSONLIV	**Break tank**	Yes
Automatic built softener	Yes	**Water supply pipe diameter**	DN15 - ½”
Rinse boiler Thermostop system	Yes - default	**Drain supply pipe diameter**	DN20-G 3/4"
Wash tank Thermostop system	Yes	**Detergent (red) hose length**	2,2 m
Wash pump soft start system	Yes	**Rinse aid (blue) hose length**	2,2 m
Stand-by system	Yes		

Logistic Information

EAN code	8017709348816	**Net weight**	59.000 kg
Packed product dimensions (WxDxH)	660x700x890 mm	**Gross weight**	66.000 kg

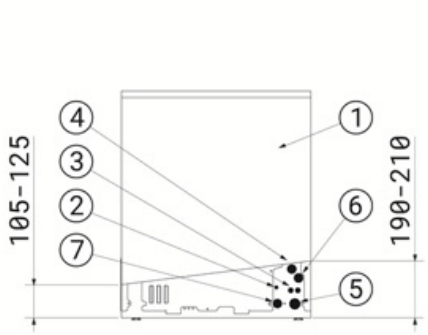

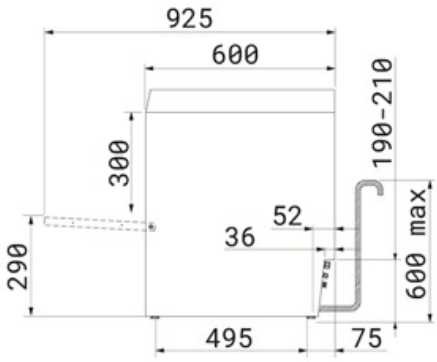

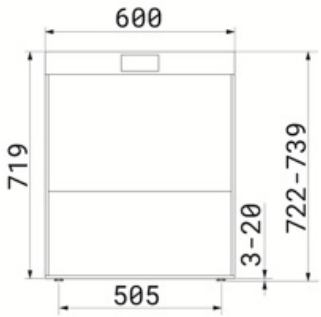

1	PANNELLO RETRO - LOWER BACK PANEL
2	MORSETTO EQUIPOTENZIALE - EARTH TERMINAL
3	TUBI POMPE PERISTALTICHE - PERISTALTIC HOSES
4	CAVO ALIMENTAZIONE ELETTRICA - ELECTRICITY SUPPLY CABLE
5	TUBO DI SCARICO - DRAIN HOSE
6	ENTRATA CAVO DI ALIMENTAZIONE DOSATORE ESTERNO - EXTERNAL DISPENSER POWER CABLE ENTRY POINT
7	TUBO DI CARICO - FILLER HOSE

Compatible Accessories



KITDETKCC500

Kit for detergent (1l) and rinse aid (1l) storage for undercounter 500 double wall models



KITSONLIV

Probe level kit

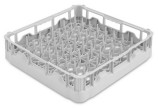

PB50D01

Polypropylene basket for 18 plates Ø250 mm max, dim.(WxDxH) 500x500x105 mm

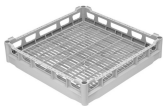

PB50G01

Universal flat bottom polypropylene basket, internal height 73 mm, dim. (WxDxH) 500x500x100 mm

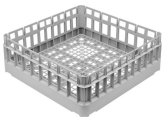

PB50G02

Universal flat bottom polypropylene basket, internal height 150 mm, dim. (WxDxH) 500x500x170 mm



PHOOS01

Polypropylene single basket for cutlery



WB50D01

Wire basket for 18 dishes Ø250 mm max or trays h 370 mm, dim. (WxDxH) 500X500x92 mm



WB50G01

Universal wire basket with flat bottom, internal height 120 mm, dim. (WxDxH) 500x500x130 mm



WB50G02

Sloped bottom wire basket for 25 glasses Ø90 mm max, dim. (WxDxH) 500x500x170 mm



WB50G03

Sloped bottom wire basket for 20 glasses Ø90 mm max, dim. (WxDxH) 500x500x235 mm



WB50G04

Wire basket with sloped bottom for 12 glasses Ø110 mm max or 9 glasses Ø135 mm max, dim. (WxDxH) 500x500x165 mm



WB50PG5

Wire basket with flat bottom for 25 plastic glasses, max. H 230 mm, min.-max. Ø 36-95 mm, dim. (WxDxH) 500x500x260 mm



WB50T02

Wire basket for 7 trays GN1/1 h 20 mm, dim. (WxD) 500x500 mm



WH00S01

Wire insert for 17 small dishes, width 100 mm, for flat bottom baskets 500x500 and 600x500 mm



WS5

Stainless steel underframe for undercounter glasswashers and dishwashers 500 mm, dim. (WxDxH) 595x595x490 mm

Benefit (TT)

Balanced door

Effortless opening and closing

The counterbalanced door is designed to ensure smooth and effortless opening and closing, providing high user convenience. Additionally, it can be locked in a halfway position, a particularly useful feature for promoting natural drying at the end of the workday, enhancing overall hygiene and preventing the buildup of residual moisture.

5-stage system

Deep cleaning and spotless washes with the patented filtration system

The innovative Smeg filtration system consists of 5 stages to completely eliminate all impurities: the 1st stage captures larger food residues; in the 2nd and 3rd stages, finer particles are captured at this filtration stage; the 4th stage features a pre-filtration grid to prevent debris from entering the tank and clouding the water. Finally, the last stage is designed to further protect the washing and draining pumps from any debris that may accidentally enter the tank during filter cleaning.

HTR+ System

Self-adaptive rinsing system for intelligent water management

The self-Adaptive HTR+ System monitors and adjusts the rinse volume with each wash cycle. The intelligent rinse management ensures the perfect amount of water and heat on the dishes, delivering consistent, reliable results, cycle after cycle.

Moulded tank

Superior washing performance and enhanced cleaning convenience with molded tub bottoms and basket guides

Smeg dishwashers are designed with moulded tank and basket guides. The absence of sharp edges ensures an optimised wash flow, guaranteeing hygiene and impeccable cleaning performance. Furthermore, this innovative design simplifies machine cleaning, reducing the need for maintenance interventions.

Integrated softener

Effective water treatment for consistently sparkling glasses

The integrated continuous regeneration water softener ensures effective water treatment, enhancing washing performance and preserving the machine's operational lifespan. The resin regeneration process takes place during the wash cycle without interruptions, providing constant control over water hardness. This system prevents limescale buildup, maximises detergent efficiency, and guarantees spotless results on glassware and dishes.

Integral double-skin

Thermal and acoustic insulation guaranteed

The double-skin design of undercounter dishwashers is engineered to optimise energy efficiency by minimising heat loss and accelerating water heating, resulting in lower energy consumption and faster start-up times. Additionally, it provides effective sound insulation, helping to reduce noise levels and ensuring a quieter, more comfortable working environment for staff.

Drain pump

Partial water replacement during the wash cycle for clean and hygienic dishes

The standard drain pump, equipped with a partial water exchange system, ensures that the dirtiest water is automatically removed at every wash cycle. This mechanism allows for continuous renewal of the water used, ensuring that each phase of the washing process is carried out with clean water. The result is optimal dishwashing performance, with outstanding efficiency and an impeccable level of hygiene.

Soft-start system

Effective management of the washing pump to protect your glassware

The Soft-Start function initiates the wash cycle gently and gradually, progressively increasing the water pressure. This system has been designed to provide optimal protection for the most fragile items, such as crystal glasses, significantly reducing the risk of chipping or damage. At the same time, it ensures excellent cleaning performance, combining efficiency and safety in every wash cycle.

MyPersonal Wash

10 pre-set washing programmes for a complete and ready-to-use solution

Each model in the PURA range offers 10 tested programmes, ensuring ready-to-use solutions for any washing requirement. With the MyPersonal Wash function, parameters such as time, temperature, pressure, and washing options can be customised, optimising cycles for delicate dishes or stubborn dirt. The result is a tailored wash, always flawless.

AdaptWash system

Consistently perfect washing pressure for flawless results with every wash

The AdaptWash system offers 3 pressure levels that automatically adjust based on the selected program, ensuring optimal cleaning for every type of load.

Hood lift

Unprecedented comfort with the patented lifting system

The new ergonomic handle, combined with the patented lifting system, minimises the effort required to open and close the hood, limiting it to just 2.5 kg. This system ensures an exceptionally smooth and lightweight operation, helping to protect the operator's health and well-being, even during extended use.

Program visibility

Program selection displayed for simplified dishwasher management

Users can select the programs to be displayed, hiding those that are unnecessary or unused. This feature not only helps prevent improper use of the appliance but also represents a significant step towards fully customising the user experience.