SPH500

Type	Hoodtype dishwashers
Crockery	Crockery; Glasses; Cutlery; GN1/1 trays
Basket dimensions	500x500 mm
Control panel	Mechanical
Standard drain pump with partial water renewal in the wash tank	Yes
Boiler type	Pressure boiler
Wash pump	Standard
Power connection	400 V 3N~ / 16 A / 9,7 kW / 50 Hz
Product dimensions (WxDxH)	634x750x1440 mm



Aesthetics

Led color	**Series**	Ecoline

Technical Features

Trays number	7 x GN1/1
Trays washing option	Yes
Water consumption per cycle	3,2 l
Wash temperature (min-max)	58 °C
Rinse temperature (min-max)	87 °C
Min. water connection temperature	5°C
Minimum water consumption per cycle	3,2 l
Max. inlet temperature	60°C
Max water hardness	5°f - 3°dH
Inlet pressure	250-1000 kPa (min-max)
Detergent load	1,5 l/h
Rinse load	0,4 l/h
Usable load height	470 mm
Maximum height with open hood	2055 mm

Programs

Programs	2 automatic programs; Self-cleaning programs
Program table	Mechanical Ecoline hoodtype
Maximum basket/hour	40
Maximum dishes/hour	720
Maximum glasses/hour	1440

Electrical Connection

Tank heating element power	2200 W	**Optional electrical connection**	230 V 3~ / 26 A / 9,7 kW / 50 Hz; 230 V~ / 16 A / 3,7 kW / 50 Hz; 230 V~ / 30 A / 6,7 kW / 50 Hz
Boiler heating element power	9000 W		
Wash pump power	700 W	**Potential equalisation**	Yes
Default connection	9700 W	**Plug**	Not present

Interface

Number of buttons	4	**On/Off button**	Yes

Construction

Tank	Deep drawn	**Filter**	5-stage filter system
Construction	Single-skin hood	**Tank capacity**	14 l
Tank material	Stainless steel AISI 304	**Boiler capacity**	8 l
Back panel	Prepainted	**Noise**	Lpa 63,1 dBA
Upper wash system	One wash and one split rinse spray arms, stainless steel	**Protection class**	IPX4
		Adjustable feet	Yes
		Drain max. height	1000 mm
Lower wash system	One wash and one split rinse spray arms, stainless steel	**Power cable length**	180 cm
Tank filter	Stainless steel		
Hood elevation system	Manual		

Accessories included

Dish basket	1x PB50D01	**Water supply hose**	Yes - 2 m
Cutlery basket	1x PHOOS04	**Drain hose**	Yes - 2m
Flat basket	1x PB50G02		

Equipments

Peristaltic detergent dispenser	Manual	**Stand-by system**	Yes
		Option for auto daily switch on	Yes, default OFF
Peristaltic rinse-aid dispenser	Manual		
Deafult chemicals dosing unit of measure	gr/lt	**Water supply pipe diameter**	DN15 - ½”
		Drain supply pipe diameter	DN20-G 3/4"
Rinse boiler Thermostop system	Yes - default		
		Detergent (red) hose length	2,2 m
Wash tank Thermostop system	Yes		
		Rinse aid (blue) hose length	2,2 m
Wash pump soft start system	Yes		

Logistic Information

EAN code	8017709334147	**Net weight**	99,000 kg
Packed product dimensions (WxDxH)	700x900x1700 mm	**Gross weight**	118,000 kg

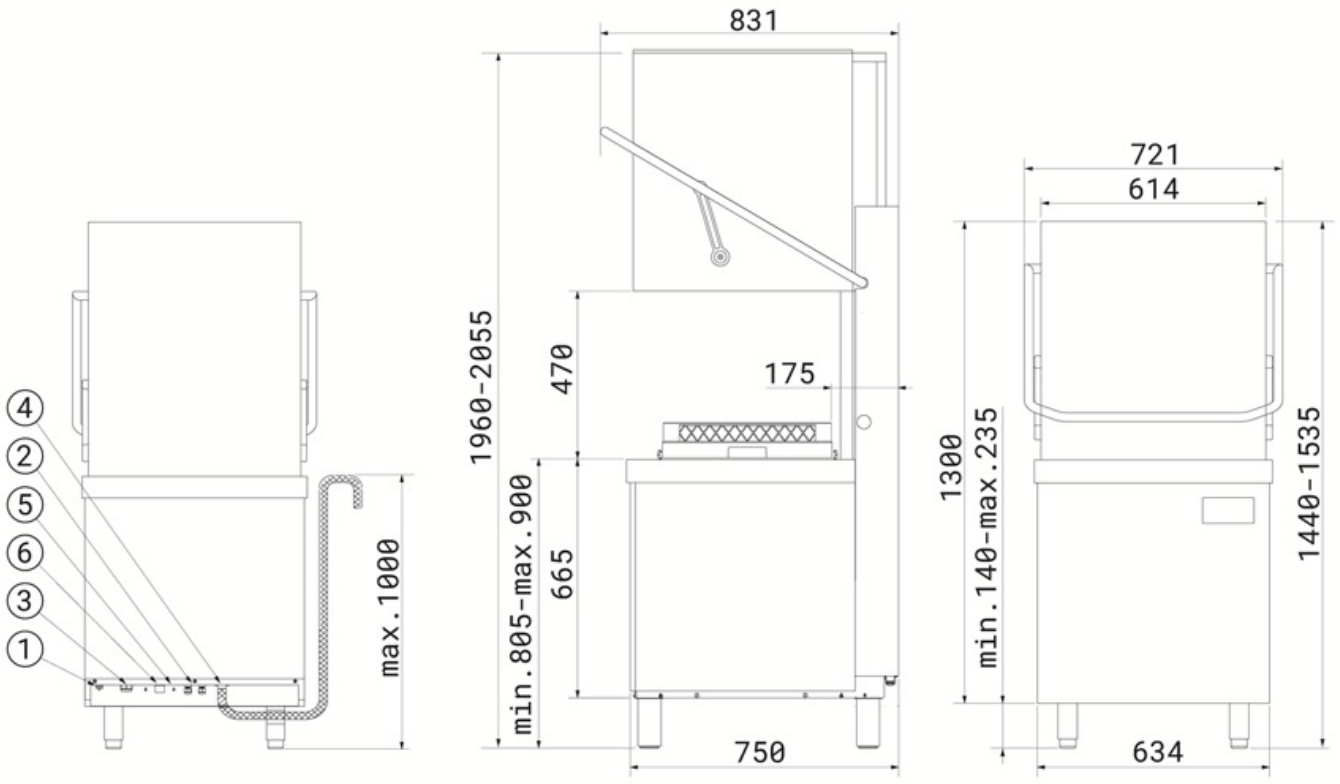

1	MORSETTO EQUIPOTENZIALE - EARTH TERMINAL
2	TUBI POMPE PERISTALTICHE - PERISTALTIC HOSES
3	CAVO ALIMENTAZIONE ELETTRICA - ELECTRICITY SUPPLY CABLE
4	TUBO DI SCARICO - DRAIN HOSE
5	ENTRATA CAVO DI ALIMENTAZIONE DOSATORE ESTERNO - EXTERNAL DISPENSER POWER CABLE ENTRY POINT
6	TUBO DI CARICO - FILLER HOSE

Compatible Accessories

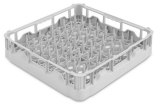

PB50D01

Polypropylene basket for 18 plates Ø250 mm max, dim.(WxDxH) 500x500x105 mm

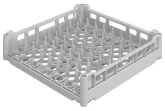

PB50T01

Polypropylene basket for 8 trays GN 1/1 h 40 mm for traywasher and hood-type models. Vertical row spacing 68 mm and horizontal row spacing 54 mm, dim. (WxDxH) 500x500x105 mm



PHOOS01

Polypropylene single basket for cutlery



PHOOS04

4 compartments polypropylene basket for cutlery



WB50G01

Universal wire basket with flat bottom, internal height 120 mm, dim. (WxDxH) 500x500x130 mm



WB50G03

Sloped bottom wire basket for 20 glasses Ø90 mm max, dim. (WxDxH) 500x500x235 mm



WB50PG5

Wire basket with flat bottom for 25 plastic glasses, max. H 230 mm, min.-max. Ø 36-95 mm, dim. (WxDxH) 500x500x260 mm



WH00S01

Wire insert for 17 small dishes, width 100 mm, for flat bottom baskets 500x500 and 600x500 mm



WT51200SHR

Entry table right side with sink and scraping hole, splashback (100mm) and lower shelf, dim. (WxDxH) 1200x720x821,5 mm

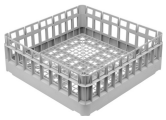

PB50G02

Universal flat bottom polypropylene basket, internal height 150 mm, dim. (WxDxH) 500x500x170 mm



PHOOGR5

Tilted glass insert for basket PB50G02 500x500 mm, configurable with 4 units of 5 glasses each (first line Ø max 110 mm, lines 2-4 Ø max 95 mm), or 5 units of 5 glasses each (forst line Ø max 95 mm, lines 2-5 Ø max 75 mm)



PHOOS03

8 compartments polypropylene basket for cutlery



WB50D01

Wire basket for 18 dishes Ø250 mm max or trays h 370 mm, dim. (WxDxH) 500X500x92 mm



WB50G02

Sloped bottom wire basket for 25 glasses Ø90 mm max, dim. (WxDxH) 500x500x170 mm



WB50G04

Wire basket with sloped bottom for 12 glasses Ø110 mm max or 9 glasses Ø135 mm max, dim. (WxDxH) 500x500x165 mm



WB50T02

Wire basket for 7 trays GN1/1 h 20 mm, dim. (WxD) 500x500 mm



WT51200SHL

Entry table left side with sink and scraping hole, splashback (100mm) and lower shelf, dim. (WxDxH) 1200x720x821,5 mm



WT51200SL

Entry table left side with sink, splashback (100mm) and lower shelf, dim. (WxDxH) 1200x720x821,5 mm



WT51200SR

Entry table right side with sink, splashback (100mm) and lower shelf, dim. (WxDxH) 1200x720x821,5 mm



WT5700SR

Entry table right side with sink, splashback (100mm) and lower shelf, dim. (WxDxH) 700x720x821,5 mm



WTC5L

Left side closure kit for Hoodtype



WTC5R

Right side closure kit for Hoodtype



WTX51200

Universal entry/exit table for either side, with lower shelf, dim. (WxDxH) 1200x560x821,5 mm



WTX51200L

Exit left side table, with splashback (100 mm) and lower shelf, dim. (WxDxH) 1200x720x821,5 mm



WTX51200R

Exit right side table, with splashback (100 mm) and lower shelf, dim. (WxDxH) 1200x720x821,5 mm



WTX5700

Universal entry/exit table for either side, with lower shelf. dim. (WxDxH) 700x560x821,5 mm



WTX5700L

Exit table left side, with back splashback (100mm) and lower shelf, dim. (WxDxH) 700x720x821,5 mm



WTX5700R

Exit table right side, with back splashback (100mm) and lower shelf, dim. (WxDxH) 700x720x821,5 mm



WTX6700F

Universal table for either side, with front coupling and lower shelf, dim. (WxDxH) 705x660x821,5 mm

Benefit (TT)

5-stage system

Deep cleaning and spotless washes with the patented filtration system

The innovative Smeg filtration system consists of 5 stages to completely eliminate all impurities: the 1st stage captures larger food residues; in the 2nd and 3rd stages, finer particles are captured at this filtration stage; the 4th stage features a pre-filtration grid to prevent debris from entering the tank and clouding the water. Finally, the last stage is designed to further protect the washing and draining pumps from any debris that may accidentally enter the tank during filter cleaning.

Moulded tank

Superior washing performance and enhanced cleaning convenience with molded tub bottoms and basket guides

Smeg dishwashers are designed with moulded tank and basket guides. The absence of sharp edges ensures an optimised wash flow, guaranteeing hygiene and impeccable cleaning performance. Furthermore, this innovative design simplifies machine cleaning, reducing the need for maintenance interventions.

Single-skin hood

Thermal and acoustic insulation guaranteed

The hood of the Ecoline features a single-skin structure designed to enhance energy efficiency by reducing heat dispersion. Additionally, it provides good sound insulation, helping to lower noise levels and ensure a quieter, more comfortable working environment for staff.

Drain pump

Partial water replacement during the wash cycle for clean and hygienic dishes

The standard drain pump, equipped with a partial water exchange system, ensures that the dirtiest water is automatically removed at every wash cycle. This mechanism allows for continuous renewal of the water used, ensuring that each phase of the washing process is carried out with clean water. The result is optimal dishwashing performance, with outstanding efficiency and an impeccable level of hygiene.

Soft-start system

Effective management of the washing pump to protect your glassware

The Soft-Start function initiates the wash cycle gently and gradually, progressively increasing the water pressure. This system has been designed to provide optimal protection for the most fragile items, such as crystal glasses, significantly reducing the risk of chipping or damage. At the same time, it ensures excellent cleaning performance, combining efficiency and safety in every wash cycle.

Hood lift

Unprecedented comfort with the patented lifting system

The new ergonomic handle, combined with the patented lifting system, minimises the effort required to open and close the hood, limiting it to just 2.5 kg. This system ensures an exceptionally smooth and lightweight operation, helping to protect the operator's health and well-being, even during extended use.

Mechanical Interface

Control panel with mechanical buttons

The mechanical version is equipped with 4 buttons: one for powering the appliance on and off, one for starting the wash cycle, one for selecting the cycle, and a button for draining the tank and initiating the final self-cleaning. The panel also includes two indicator lights that provide important information, such as low salt levels and the boiler status.