SPH503L

Tipo	Máquina de lavar louça de capota
Louça	Louça; Copos; Talheres; GN1/1 trays
Dimensões do cesto	500x500 mm
Painel de comandos	Controlo eletrónico da temperatura
Standard drain pump with partial water renewal in the wash tank	Sim
Tipo de caldeira	Caldeira de pressão
Bomba de lavagem	Standard
Ligação energética	400 V 3N~ / 16 A / 9,7 kW / 50 Hz
Dimensões do produto (LxPxA)	634x750x1440 mm



Mercado

Indústrias	Bares, Cafés e Pubs, Hotelaria, Restaurantes / Catering, Padarias / Pastelarias, Indústrias Alimentares, Estabelecimentos de Cuidados, Supermercados / Comércio de alimentos, Catering, Indústrias Alimentares, Talhos

Design

Cor dos LEDs		**Design**	Ecoline

Especificações técnicas

Trays number	7 x GN1/1
Opção de lavagem dos tabuleiros	Sim
Consumo de água por ciclo	3,2 l
Temperatura de lavagem (mín-máx)	58 °C
Temperatura de enxaguamento (mín.-máx.)	87 °C
Temperatura de enxaguamento a frio	No
Temperatura pré-definida de ligação da água	5°C
Consumo mínimo de água por ciclo	3,2 l
Temperatura máxima de entrada:	60°C
Dureza máxima da água	5°f - 3°dH
Pressão de entrada	250-1000 kPa (min-max)
Carga de detergente	1,5 l/h
Carga de enxaguamento	0,4 l/h
Altura de carga operável	470 mm
Altura máxima com a capota aberta	2055 mm

Programas

Programas	3 programas automáticos; Programas de autolimpeza
Opções do programa	Enxaguamento extra, Ciclo da água limpa
Tabela de programas	Electronic Ecoline hoodtype
Numero máximo de cestos/hora	40
Numero máximo de pratos/hora	720
Numero máximo de copos/hora	1440

Ligação elétrica

Potência do elemento de aquecimento do tanque	2200 W
Potência do elemento de aquecimento da caldeira	9000 W
Potência da bomba de lavagem	700 W
Ligação pré-definida	9700 W
Ligação eléctrica opcional	230 V 3~ / 28 A / 9,7 kW / 50 Hz; 230 V~ / 16 A / 3,7 kW / 50 Hz ; 230 V~ / 30 A / 6,7 kW / 50 Hz
Potential equalisation	Yes
Ficha elétrica	Não

Interface

Display	4 digitos
Numero de botões	5
Luz indicadora On/Off	Sim
Indicador da fase do programa	Sim
Indicador de fim do programa	Sim
Diagnóstico manual	Sim

ESPECIFICAÇÕES TÉCNICAS

Cuba	Profundo
Tipologia	Single-skin hood
Material da cuba	Aço inox AISI 304
Painel traseiro	Previamente pintado
Sistema de lavagem superior	Um braço de lavagem e um braço de enxaguamento dividido, em aço inoxidável.
Sistema de lavagem inferior	One wash and one split rinse spray arms, stainless steel
Filtro da cuba	Aço inox
Hood elevation system	Manual
Filtro	Sistema de filtragem de 5 estágios
Capacidade da cuba	14 l
Capacidade da caldeira	8 l
Ruído	Lpa 63,1 dBA
Classe de Proteção	IPX4
Pés ajustáveis	Sim
Altura max. de drenagem	1000 mm
Power cable length	180 cm

Acessórios incluídos

Cesto para pratos	1x PB50D01
Cesto para talheres	1x PHOOS04
Cesto de fundo plano	1x PB50G02
Mangueira de abastecimento de água	Sim - 2m
Mangueira de drenagem	Sim - 2m

Equipamentos

Dispensador peristáltico de detergente	Controlo eletrónico
Dispensador peristáltico de abrilhantador	Controlo eletrónico
Unidade de medida da dosagem de produtos químicos	gr/lt
Sistema Thermostop para caldeira de enxaguamento	Yes - default
Sistema Thermostop no tanque de lavagem	Sim
Sistema de arranque suave da bomba de lavagem	Sim
Sistema Stand-by	Sim
Opção para ativação automática diária	Sim, desligado por definição
Contador de ciclos	Sim
Diâmetro do tudo de abastecimento de água	DN15 - ½”
Ø do tubo de drenagem	DN20-G 3/4"
Comprimento da mangueira de detergente (vermelha)	2,2 m
Comprimento da mangueira de enxaguamento (azul)	2,2 m

Dados de logística

Código EAN	8017709339036
Dimensões do produto embalado (LxPxA)	700x900x1700 mm
Peso líquido (kg)	98,000 kg
Peso bruto (kg)	117,000 kg

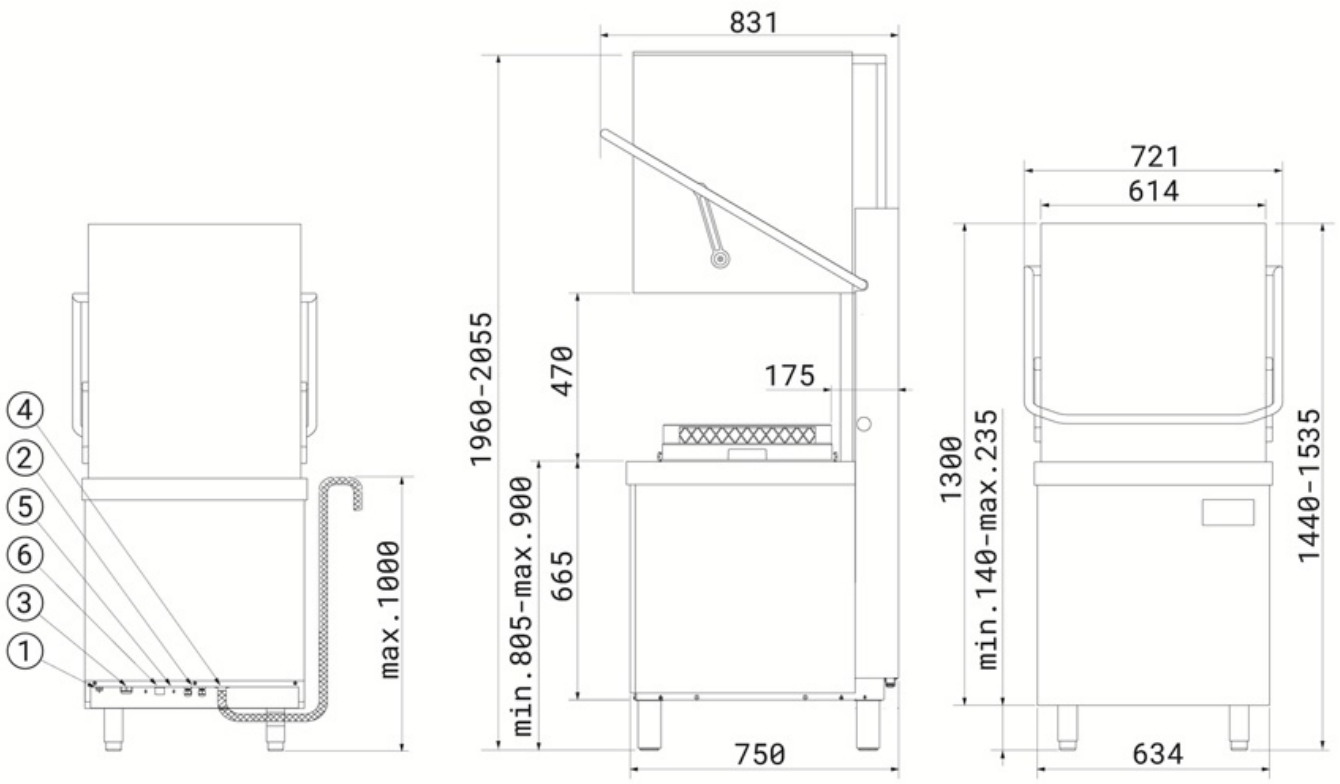

1	MORSETTO EQUIPOTENZIALE - EARTH TERMINAL
2	TUBI POMPE PERISTALTICHE - PERISTALTIC HOSES
3	CAVO ALIMENTAZIONE ELETTRICA - ELECTRICITY SUPPLY CABLE
4	TUBO DI SCARICO - DRAIN HOSE
5	ENTRATA CAVO DI ALIMENTAZIONE DOSATORE ESTERNO - EXTERNAL DISPENSER POWER CABLE ENTRY POINT
6	TUBO DI CARICO - FILLER HOSE

Acessórios Compatíveis

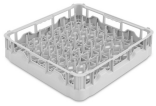

PB50D01

Polypropylene basket for 18 plates Ø250 mm max, dim.(WxDxH) 500x500x105 mm

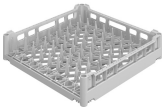

PB50T01

Polypropylene basket for 8 trays GN 1/1 h 40 mm for traywasher and hood-type models. Vertical row spacing 68 mm and horizontal row spacing 54 mm, dim. (WxDxH) 500x500x105 mm



PHOOS01

Polypropylene single basket for cutlery



PHOOS04

4 compartments polypropylene basket for cutlery



WB50G01

Universal wire basket with flat bottom, internal height 120 mm, dim. (WxDxH) 500x500x130 mm



WB50G03

Sloped bottom wire basket for 20 glasses Ø95 mm max, dim. (WxDxH) 500x500x235 mm



WB50PG5

Wire basket with flat bottom for 25 plastic glasses, max. H 230 mm, min.-max. Ø 36-95 mm, dim. (WxDxH) 500x500x260 mm



WH00S01

Wire insert for 17 small dishes, width 100 mm, for flat bottom baskets 500x500 and 600x500 mm



WT51200SHR

Entry table right side with sink and scraping hole, splashback (100mm) and lower shelf, dim. (WxDxH) 1200x720x821,5 mm

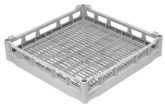

PB50G01

Universal flat bottom polypropylene basket, internal height 73 mm, dim. (WxDxH) 500x500x100 mm



PHOOGR5

Tilted glass insert for basket PB50G02 500x500 mm, configurable with 4 units of 5 glasses each (first line Ø max 110 mm, lines 2-4 Ø max 95 mm), or 5 units of 5 glasses each (forst line Ø max 95 mm, lines 2-5 Ø max 75 mm)



PHOOS03

8 compartments polypropylene basket for cutlery



WB50D01

Wire basket for 18 dishes Ø250 mm max or trays h 370 mm, dim. (WxDxH) 500X500x92 mm



WB50G02

Sloped bottom wire basket for 25 glasses Ø90 mm max, dim. (WxDxH) 500x500x170 mm



WB50G04

Wire basket with sloped bottom for 12 glasses Ø110 mm max or 9 glasses Ø135 mm max, dim. (WxDxH) 500x500x165 mm



WB50T02

Wire basket for 7 trays GN1/1 h 20 mm, dim. (WxD) 500x500 mm



WT51200SHL

Entry table left side with sink and scraping hole, splashback (100mm) and lower shelf, dim. (WxDxH) 1200x720x821,5 mm



WT51200SL

Entry table left side with sink, splashback (100mm) and lower shelf, dim. (WxDxH) 1200x720x821,5 mm



WT51200SR

Entry table right side with sink, splashback (100mm) and lower shelf, dim. (WxDxH) 1200x720x821,5 mm



WT5700SR

Entry table right side with sink, splashback (100mm) and lower shelf, dim. (WxDxH) 700x720x821,5 mm



WTC5L

Left side closure kit for Hoodtype



WTC5R

Right side closure kit for Hoodtype



WTX51200

Universal entry/exit table for either side, with lower shelf, dim. (WxDxH) 1200x560x821,5 mm



WTX51200L

Exit left side table, with splashback (100 mm) and lower shelf, dim. (WxDxH) 1200x720x821,5 mm



WTX51200R

Exit right side table, with splashback (100 mm) and lower shelf, dim. (WxDxH) 1200x720x821,5 mm



WTX5700

Universal entry/exit table for either side, with lower shelf. dim. (WxDxH) 700x560x821,5 mm



WTX5700L

Exit table left side, with back splashback (100mm) and lower shelf, dim. (WxDxH) 700x720x821,5 mm



WTX5700R

Exit table right side, with back splashback (100mm) and lower shelf, dim. (WxDxH) 700x720x821,5 mm



WTX6700F

Universal table for either side, with front coupling and lower shelf, dim. (WxDxH) 705x660x821,5 mm

Benefit (TT)

Interface

Control panel with electronic buttons

The electronic control panel features an intuitive interface with soft-touch buttons, allowing easy selection of one of the three wash programmes: short, medium, or intensive. There are also buttons for power, selection, and cycle start. The display provides real-time monitoring of the tank and boiler temperature, as well as diagnostics, ensuring effortless and immediate control of the main functions.

5-stage system

Deep cleaning and spotless washes with the patented filtration system

The innovative Smeg filtration system consists of 5 stages to completely eliminate all impurities: the 1st stage captures larger food residues; in the 2nd and 3rd stages, finer particles are captured at this filtration stage; the 4th stage features a pre-filtration grid to prevent debris from entering the tank and clouding the water. Finally, the last stage is designed to further protect the washing and draining pumps from any debris that may accidentally enter the tank during filter cleaning.

Moulded tank

Superior washing performance and enhanced cleaning convenience with molded tub bottoms and basket guides

Smeg dishwashers are designed with moulded tank and basket guides. The absence of sharp edges ensures an optimised wash flow, guaranteeing hygiene and impeccable cleaning performance. Furthermore, this innovative design simplifies machine cleaning, reducing the need for maintenance interventions.

Single-skin hood

Thermal and acoustic insulation guaranteed

The hood of the Ecoline features a single-skin structure designed to enhance energy efficiency by reducing heat dispersion. Additionally, it provides good sound insulation, helping to lower noise levels and ensure a quieter, more comfortable working environment for staff.

Drain pump

Partial water replacement during the wash cycle for clean and hygienic dishes

The standard drain pump, equipped with a partial water exchange system, ensures that the dirtiest water is automatically removed at every wash cycle. This mechanism allows for continuous renewal of the water used, ensuring that each phase of the washing process is carried out with clean water. The result is optimal dishwashing performance, with outstanding efficiency and an impeccable level of hygiene.

Soft-start system

Effective management of the washing pump to protect your glassware

The Soft-Start function initiates the wash cycle gently and gradually, progressively increasing the water pressure. This system has been designed to provide optimal protection for the most fragile items, such as crystal glasses, significantly reducing the risk of chipping or damage. At the same time, it ensures excellent cleaning performance, combining efficiency and safety in every wash cycle.

Hood lift

Unprecedented comfort with the patented lifting system

The new ergonomic handle, combined with the patented lifting system, minimises the effort required to open and close the hood, limiting it to just 2.5 kg. This system ensures an exceptionally smooth and lightweight operation, helping to protect the operator's health and well-being, even during extended use.