SPO5L2S

Família	Fornos
Subfamília	Forno a vapor combinado 5 tabuleiros GN1/1
Tipo de energia	Elétrico
Tipo de forno	Forno Galileo profissional
Fonte de energia	400 V 3N~ / 17 A / 8 kW / 50-60 Hz
Pés reguláveis em altura	Sim
Dimensões do produto (LxPxA)	790x833x645 mm
Profundidade máxima com a porta aberta	1581 mm



Mercado

Indústrias	Hotelaria, Restaurantes, Padarias / Pastelarias, Indústrias Alimentares, Estabelecimentos de Cuidados, Retalho alimentar, Catering e cantinas

Design

Porta com tiras em aço inox	Sim	**Cor dos dígitos no display**	Multicor
Cor	Aço Inox/Preto	**Painel frontal**	Vidro/Aço Inox
Display	TFT digital, 7" touch		

Comandos

Nº de programas em memória	512	**Função de pausa**	Ajustável
Receitas	Sim	**Forced cooling**	Sim
Temporizador	de 1 min até 23h59 min por passo	**Regulação da chaminé**	Automático
Função MultiStep	8 + preheating + keepIwarm	**Programas de lavagem**	Sim
Início diferido	Sim; Não	**HACCP data**	Sim
Pré-aquecimento	Sim	**Auto diagnóstico**	Sim

Opções

Exaustor compatível	K510X

Acessórios incluídos

Sonda térmica	Sonda térmica de 4 pontos externos

Ligação elétrica

Ficha elétrica	Não

ESPECIFICAÇÕES TÉCNICAS

Material do forno	Aço Inox / Vidro / Plástico
Dimensões da cavidade (LxPxA)	670x560x420 mm
Material da cavidade	Aço inox
Níveis de tabuleiros	5
Suporte dos tabuleiros	Aço inox AISI 304
Kit de adaptação para tabuleiros 600x400 mm	Sim
Distância entre tabuleiros	70 mm
Material da porta	Vidro triplo
Abertura da porta	Lateral
Tipo de puxador	Rotativo
Vidro	Abre com dobradiça
Potência da ventoinha	200 W
RPM da ventoinha	Progressão %
RPM standard da ventoinha	2850 rpm
RPM da ventoinha na velocidade inferior	1425 rpm
Injeção de água em cada ventoinha	Sim
Níveis de humidificação	Automático / Percentual progressivo
Steam control	5-100% (min-max)
Caldeira aberta	Sim
Ø de drenagem	1" 1/2 - DN 40 mm
Posição de exaustão	Traseira
Sistema de arrefecimento	Sim
Tipo de temporizador	Elétrico
Temperaturas	30-270°C
Aviso de final de cozedura	Sim
Interruptor de segurança com porta aberta	Sim
Reset de segurança do termostato	Sim
Deflector removível	Sim
Tipo de detergente	Líquido
Integrated detergent tank	Vanishing 3l
Interruptor de luz com porta aberta	Sim
Iluminação	1 lâmpada LED
Potência das lâmpadas	3.6 W
Porta USB	Sim
Nº de entradas de água	1
Tubo de carga de água	Sim
Pressão da entrada de água	200-1000 kPa (min-max)
Comprimento do cabo de alimentação	170 cm
Painel traseiro	Porta galvanizada
Proteção IPX	IPX4

Dados de logística

Dimensões do produto embalado (LxPxA)	850x950x700 mm	**Peso líquido (kg)**	90,000 kg
		Peso bruto (kg)	110,000 kg
Código EAN	8017709323066		

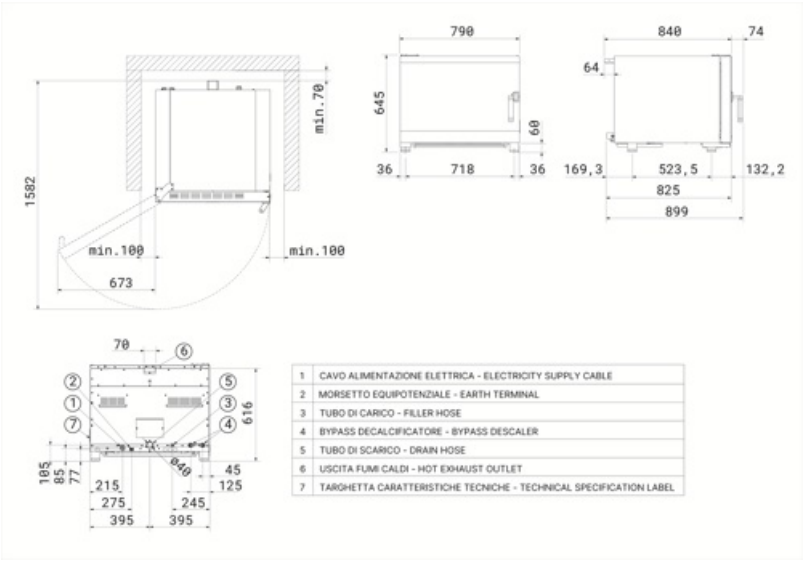

Acessórios Compatíveis



3743



3751

Kit of 4 flat perforated aluminium tray EN 600×400 mm



3805

Kit of 4 chrome-plated wire grids EN 600×400 mm

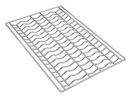

3810



CLB45LSE

Flow meter for filter FB45LSE1100



FB45LSE1100

Water treatment filter for Galileo Professional oven; 7.907 litres capacity with 10 Kh hardness and bypass set 1

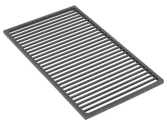

G11T

Non-stick GN1/1 tray

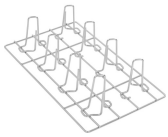

G11X8P

8 vertical GN1/1 chicken grid



KITSTCK55

Conjunction kit between 2 stacked Galileo ovens (SPO4 or SPO5)



R4EN6040

Galileo Professional oven tray support kit for 4 EN 600x400 mm trays



T11TH20

GN1/1 non-stick tray, 20 mm height



TB45LSE

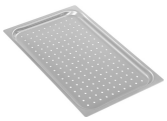

TF11XH2

GN 1/1 perforated aluminium tray, 20 mm height

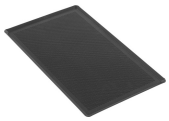

TMF11TH2

GN 1/1 non-sticking microperforated tray, 20 mm height

Symbols glossary


Elétrico: a fonte de energia do forno é a eletricidade.


Fan forced heating



Automatic washing


Steam generated by injectiong water into the fan and evaporation on the heating element


Steam and hot air combined cooking


Humidity and heat controlled proving


Fan speed adjustable between 50 and 100% of the speed



Core probe baking by temperature difference (Δ t)


Barbecue: aquecimento seco para grelhados perfeitos.


Saturated steam created by boiling in the cavity


Sous-vide baixa temperatura

Benefit (TT)

Hinged opening

Easily accessible glass for effortless maintenance and cleaning

The glass panels are designed to be easily accessible and inspectable, ensuring great convenience during cleaning and maintenance operations. This feature significantly simplifies the process, making it quick and efficient, while ensuring that every intervention can be carried out with maximum comfort and complete safety.

WashArt System

Efficient washing, optimised consumption, and minimal space usage

The WashArt washing system, equipped with a rotating nozzle, ensures even distribution of water and detergent within the cavity, providing deep cleaning and quick drying. To meet every need, four washing programmes are available: Short, Medium, Long, and Grill, along with a dedicated rinse programme. Thanks to its advanced technology, WashArt optimises efficiency and reduces consumption, while the rotating nozzle, with its compact design, minimises space usage in the cooking chamber.

Fan speed

Precise fan speed modulation for consistently even cooking results

In the Galileo Professional ovens, the fan speed can be adjusted from a minimum of 50% to a maximum of 100%, in 5% increments. This feature allows for precise customisation of the airflow, perfectly adapting it to the specific needs of each preparation. Thanks to this versatility, it is possible to achieve flawless cooking results, ensuring even and accurate heat distribution. Moreover, precisely adjusting the fan speed helps preserve the delicacy of sensitive foods, preventing exposure to excessive heat and creating the ideal conditions to maintain their lightness and internal structure.

Core probe

Multipoint cooking sensor for precise and uniform results

Optimal precision and control thanks to the four temperature measurement points, ensuring an accurate reading at every stage of cooking. The advanced sensor precisely detects the heat at the core of the food, guaranteeing the ideal cooking level for consistently perfect and uniform results.

SteamArt Technology

Open Boiler system to generate steam directly within the cavity, in quick times and at very low temperatures

Thanks to the innovative Open Boiler system, steam is generated directly within the cavity, in very short times and at very low temperatures (starting from 30°C, ideal for supporting the proofing phase). This system is particularly suited for delicate cooking processes that require the use of 100% steam, ensuring even and gentle cooking that preserves the nutritional properties, taste, and texture of the food.

8 cooking stages

Flexibility and precision in every cooking stage

The ability to set multiple cooking phases, in addition to preheating and keeping warm, gives the combi-steam oven exceptional versatility, responding precisely to the diverse needs of every preparation. Each phase of the cooking process can be customised with great accuracy, optimising results whether it's slow cooking at low temperatures or achieving a perfect final browning. Thanks to the advanced control of steam and heat parameters, it is possible to achieve even cooking on every surface, significantly enhancing the quality of the finished product and ensuring flawless results.

3lt retractable tank

Retractable tank with intelligent detergent level monitoring

The oven is equipped with a practical 3-litre retractable container for liquid detergent, designed to simplify and speed up cleaning operations. Thanks to this tank, up to 45 washes can be carried out before a refill is needed. The detergent level is always monitored via the "detergent level" bar displayed on the screen, which uses three intuitive colours: green to indicate a full tank, yellow for an intermediate level, and red to alert when a refill is required.