SPR30UGGAN

Cooker size	30"
Hob type	Gas
Type of main oven	Gas with gas grill
EAN code	8017709353445



Aesthetics

Front panel color	Matt black
Aesthetic	SPR
Colour	Stainless steel
Logo position	Facia below the oven
Finishing	Satin
Serie	Professional
Hob colour	Black enamel
Type of pan stands	Cast Iron

Type of control setting	Control knobs
Control knobs	Smeg new design with knurled ferrule
No. of controls	6
Serigraphy colour	Black
Display	Touch
Handle	Smeg new design with knurled handle
Handle Colour	Brushed stainless steel
Feet	Stainless steel

Programs / Functions

No. of cooking functions 3

Traditional cooking functions

Large grill

Base

Fan assisted bottom

Other functions

Defrost by time

Hob technical features

Total no. of cook zones 4

Front left - 12000 BTU
Rear left - 10000 BTU
Rear right - 10000 BTU
Front right - 18000 BTU

Automatic electronic ignition	Yes	**Burner caps**	Matt black enamelled
Gas safety valves	Yes		

Main Oven Technical Features



No. of lights	1	**Light when oven door is open**	Yes
Fan number	1	**Removable door**	Yes
Gross volume, 1st cavity	4.56 cu. ft.	**Total no. of door glasses**	3
Cavity material	Ever Clean enamel	**Cooling system**	Tangential
No. of shelves	6	**Grill type**	Gas
Light type	Halogen	**Soft Close system**	Yes
Light Power	40 W		

Options Main Oven

Minimum Temperature	250 °F	**Maximum temperature**	500 °F

Accessories included for Main Oven & Hob

Oven grid with stop, tray support	2

Electrical Connection

Current	15 A	**Frequency**	60 Hz
Voltage	120 V	**Terminal block**	3 poles
Type of electric cable installed	Yes, Single phase	**Plug**	(B) NEMA 5-15P
Power supply cable length	59 1/16 "		

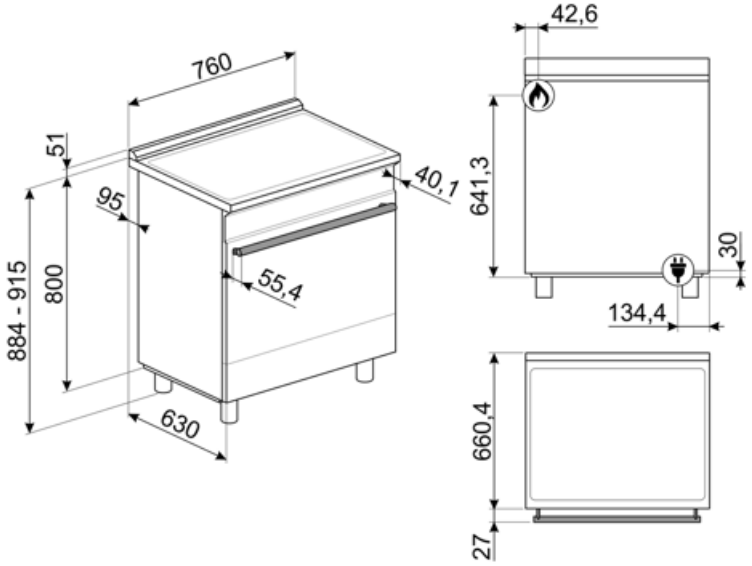
760
51
95
884 - 915
800
55,4
630
40,1
42,6
641,3
30
134,4
660,4
27

Compatible Accessories



GRM

Coffee machine support

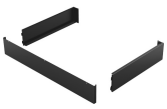

KITTKSPR30

Plinth, 90cm, three sides, black, suitable for SPR cookers 30''



SFLK1

Child lock



WOKGHU

Cast iron WOK Support



GT3T

Totally extractable telescopic guides



PALPZ

Pizza shovel with folding handle. Dimensions L31.5 x H32.5 cm. Easy and convenient to use and store. Perfect for serving pizza, bread and savory pastries in a safe and professional way.



STONE2

Rectangular pizza stone without handles, suitable for 45cm and 60cm wide ovens. Dimensions W42 x H1.8 x D37.5cm. Ideal for cooking pizzas with the same results as a typical wood-fired oven. Can also be used for baking bread, focaccias and other recipes such as pies, flans or biscuits

Alternative products



SPR30UGGX

Colour: Stainless steel

Symbols glossary



Heavy duty cast iron pan stands: for maximum stability and strength.



Air cooling system: to ensure a safe surface temperatures.



4.3 inch display with LED technology, usability with knobs + 3 touch keys



Ever Clean Enamel: Ever Clean enamel is applied electrostatically, corner to corner and edge to edge to prevent cracking or cracks over time. It is a particular pyrolytic enamel, resistant to acids which, in addition to being pleasantly bright, promotes greater cleaning of the oven walls, thanks to its lower porosity. It is baked at over 850 ° C and slowly polymerized at a scientifically determined rate to ensure uniform depth and strength Ever Clean enamel creates an impeccable finish both on the inside of the oven and on the trays, making the surfaces of the oven incredibly easy to maintain over time as it reduces the adhesion of fat during cooking



Base: the heat comes only from the bottom of the cavity. The fan is not active. Ideal for sweet and savory pies, cobblers and pizzas. Designed to complete cooking and make food more crunchy This symbol in gas ovens indicates the gas burner.



Gas ovens offer instantaneous heat control, reduced cooking times and the ability to bake at much lower temperatures than electric ovens.



Side lights: Two opposing side lights increase visibility inside the oven.



The oven cavity has 6 different cooking levels.



Ultra rapid burners: Powerful ultra rapid burners offer up to 5kw of power.



Knobs control



Defrost by time: Manual defrost function. At the end of the set duration, the function stops.



Triple glazed doors: Number of glazed doors.



Fan assisted base: the mix of fan and lower heating element alone allows to finish cooking foods already cooked on the surface but not internally more quickly. This system is recommended to finish cooking foods that are already well cooked on the surface, but not internally, which therefore require a moderate higher heat. Ideal for any type of food.



Grill: Very intense heat coming only from above from a double heating element. The fan is not active. Provides excellent grilling and gratinating results. Used at the end of cooking, it gives a uniform browning to dishes.



All glass inner door: All glass inner door, a single flat surface which is simple to keep clean.



Automatic opening: some models have Automatic opening door when the cycle is finished which is a perfect solution for handle-less kitchen units as no handle is needed. For safety reasons, the door locks automatically when the machine is in use to avoid it being opened inadvertently.



Soft close: all models are equipped with advanced function of smooth closing of the door, which allows the device to close smoothly and quietly.