# SPR30UGGX

| | |
|---|---|
| **Cooker size** | 30" |
| **Hob type** | Gas |
| **Type of main oven** | Gas with gas grill |
| **EAN code** | 8017709304423 |



## Aesthetics

| | |
|---|---|
| **Front panel color** | Stainless steel |
| **Aesthetic** | SPR |
| **Colour** | Stainless steel |
| **Logo position** | Facia below the oven |
| **Finishing** | Satin |
| **Serie** | Professional |
| **Hob colour** | Black enamel |
| **Type of pan stands** | Cast Iron |

| | |
|---|---|
| **Type of control setting** | Control knobs |
| **Control knobs** | Smeg new design with knurled ferrule |
| **No. of controls** | 6 |
| **Serigraphy colour** | Black |
| **Display** | Touch |
| **Handle** | Smeg new design with knurled handle |
| **Handle Colour** | Brushed stainless steel |
| **Feet** | Stainless steel |

## Programs / Functions

**No. of cooking functions** 3

**Traditional cooking functions**

Large grill

Base

Fan assisted bottom

**Other functions**

Defrost by time

## Hob technical features

| | |
|---|---|
| **Total no. of cook zones** | 4 |

Front left - 12000 BTU
Rear left - 10000 BTU
Rear right - 10000 BTU
Front right - 18000 BTU

| | | | |
|---|---|---|---|
| **Automatic electronic ignition** | Yes | **Burner caps** | Matt black enamelled |
| **Gas safety valves** | Yes | | |

## Main Oven Technical Features



| | | | |
|---|---|---|---|
| **No. of lights** | 1 | **Light when oven door is open** | Yes |
| **Fan number** | 1 | **Removable door** | Yes |
| **Gross volume, 1st cavity** | 4.56 cu. ft. | **Total no. of door glasses** | 3 |
| **Cavity material** | Ever Clean enamel | **Cooling system** | Tangential |
| **No. of shelves** | 6 | **Grill type** | Gas |
| **Light type** | Halogen | **Soft Close system** | Yes |
| **Light Power** | 40 W | | |

## Options Main Oven

| | | | |
|---|---|---|---|
| **Minimum Temperature** | 250 °F | **Maximum temperature** | 500 °F |

## Accessories included for Main Oven & Hob

| | |
|---|---|
| **Oven grid with stop, tray support** | 2 |

## Electrical Connection

| | | | |
|---|---|---|---|
| **Current** | 1 A | **Power supply cable length** | 59 1/16 " |
| **Circuit breaker** | 15 A | **Frequency** | 60 Hz |
| **Voltage** | 120 V | **Terminal block** | 3 poles |
| **Type of electric cable installed** | Yes, Single phase | **Plug** | (B) NEMA 5-15P |

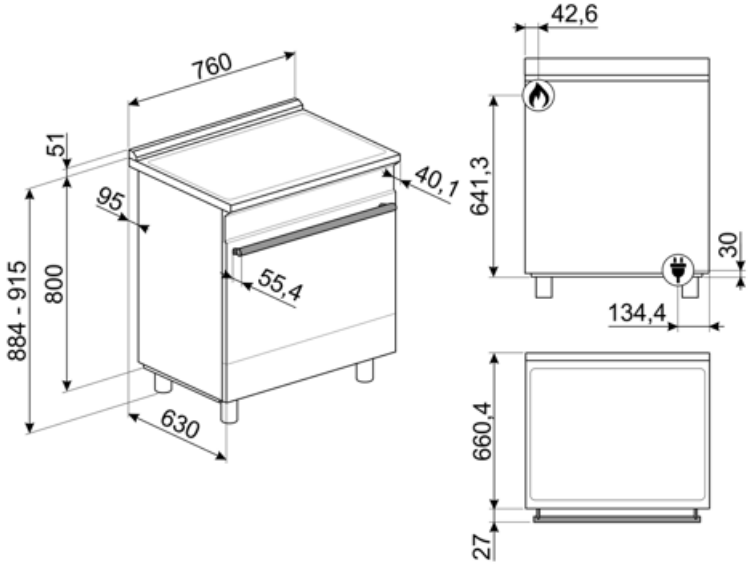
760
51
95
884 - 915
800
55,4
630
40,1
42,6
641,3
30
134,4
660,4
27

## Compatible Accessories



**GRM**

Coffee machine support

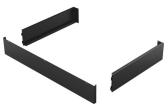

**KITTKSPR30**

Plinth, 90cm, three sides, black, suitable for SPR cookers 30''



**SFLK1**

Child lock



**WOKGHU**

Cast iron WOK Support



**GT3T**

Totally extractable telescopic guides



**PALPZ**

Pizza shovel with folding handle. Dimensions L31.5 x H32.5 cm. Easy and convenient to use and store. Perfect for serving pizza, bread and savory pastries in a safe and professional way.



**STONE2**

Rectangular pizza stone without handles, suitable for 45cm and 60cm wide ovens. Dimensions W42 x H1.8 x D37.5cm. Ideal for cooking pizzas with the same results as a typical wood-fired oven. Can also be used for baking bread, focaccias and other recipes such as pies, flans or biscuits

## Alternative products



**SPR30UGGAN**

**Colour:** Stainless steel

## Symbols glossary



Heavy duty cast iron pan stands: for maximum stability and strength.



Air cooling system: to ensure a safe surface temperatures.




4.3 inch display with LED technology, usability with knobs + 3 touch keys



Ever Clean Enamel: Ever Clean enamel is applied electrostatically, corner to corner and edge to edge to prevent cracking or cracks over time. It is a particular pyrolytic enamel, resistant to acids which, in addition to being pleasantly bright, promotes greater cleaning of the oven walls, thanks to its lower porosity. It is baked at over 850 ° C and slowly polymerized at a scientifically determined rate to ensure uniform depth and strength Ever Clean enamel creates an impeccable finish both on the inside of the oven and on the trays, making the surfaces of the oven incredibly easy to maintain over time as it reduces the adhesion of fat during cooking



Base: the heat comes only from the bottom of the cavity. The fan is not active. Ideal for sweet and savory pies, cobblers and pizzas. Designed to complete cooking and make food more crunchy This symbol in gas ovens indicates the gas burner.



Gas ovens offer instantaneous heat control, reduced cooking times and the ability to bake at much lower temperatures than electric ovens.



Side lights: Two opposing side lights increase visibility inside the oven.




The oven cavity has 6 different cooking levels.




Ultra rapid burners: Powerful ultra rapid burners offer up to 5kw of power.



Knobs control



Defrost by time: Manual defrost function. At the end of the set duration, the function stops.




Triple glazed doors: Number of glazed doors.



Fan assisted base: the mix of fan and lower heating element alone allows to finish cooking foods already cooked on the surface but not internally more quickly. This system is recommended to finish cooking foods that are already well cooked on the surface, but not internally, which therefore require a moderate higher heat. Ideal for any type of food.



Grill: Very intense heat coming only from above from a double heating element. The fan is not active. Provides excellent grilling and gratinating results. Used at the end of cooking, it gives a uniform browning to dishes.



All glass inner door: All glass inner door, a single flat surface which is simple to keep clean.



Automatic opening: some models have Automatic opening door when the cycle is finished which is a perfect solution for handle-less kitchen units as no handle is needed. For safety reasons, the door locks automatically when the machine is in use to avoid it being opened inadvertently.



Soft close: all models are equipped with advanced function of smooth closing of the door, which allows the device to close smoothly and quietly.