SPR36UIMX

Cooker size	36"
Cavity heat source	ELECTRICITY
Hob type	Induction
Type of main oven	Thermo-ventilated
Cleaning system main oven	Vapor Clean
EAN code	8017709308971



Aesthetics

Design	Square design
Front panel color	Stainless steel
Command panel finish	Stainless steel
Aesthetic	SPR
Logo	Assembled
Colour	Stainless steel
Logo position	Facia below the oven
Serie	Professional
Hob colour	Stainless steel

Type of control setting	Control knobs
LED colours	Red
Control knobs	Smeg new design with knurled ferrule
Controls colour	Stainless steel
No. of controls	7
Serigraphy colour	Black
Display	Touch
Handle	Smeg new design with knurled handle
Handle Colour	Brushed stainless steel

Programs / Functions

No. of cooking functions 8

Traditional cooking functions

- Static
- Fan assisted
- Circulaire
- Small grill
- Large grill
- Fan grill (large)
- Fan assisted bottom
- Pizza

Other functions

 Defrost by time

Cleaning functions

 Vapor clean

Hob options



End cooking timer	5	**Multizone Option**	Yes
Minute minder	1		

Hob technical features



Total no. of cook zones 5

Front left - 1.30 kW - Booster 1.40 kW
Rear left - 2.30 kW - Booster 3.00 kW
Central - 2.30 kW - Booster 3.00 kW
Rear right - 1.30 kW - Booster 1.40 kW
Front right - 2.30 kW - Booster 3.00 kW

No. of cooking zones with Booster	5	**Automatic switch off when overflow**	Yes
Number of Flexible zones	1	**Automatic pan detection**	Yes
Booster power left Multizone	3,7 kW	**Minimum pan diameter indication**	Yes
Booster power right Multizone	3,7 kW	**Selected zone indicator**	Yes
Automatic switch off when overheat	Yes	**Residual heat indicator**	Yes

Main Oven Technical Features

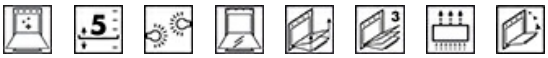

No. of lights	2	**Removable inner door**	Yes
Fan number	2	**Total no. of door glasses**	3
Gross volume, 1st cavity	4.45 cu. ft.	**Cooling system**	Tangential
Cavity material	Ever Clean enamel	**Lower heating element power**	1700 W
No. of shelves	5	**Upper heating element - Power**	1200 W
Type of shelves	Metal racks	**Grill elememt**	1700 W
Light type	Halogen	**Large grill - Power**	2900 W
Light Power	40 W	**Circular heating element - Power**	1550 W
Cooking time setting	Minute minder	**Grill type**	Electric
Full glass inner door	Yes		

Soft Close system	Yes

Options Main Oven

Minimum Temperature	151 °F	**Maximum temperature**	500 °F

Accessories included for Main Oven & Hob

Oven grid with stop, tray support	2	**Meat Probe**	1

Electrical Connection

Circuit breaker	50 A	**Frequency**	60 Hz
Voltage	208/240 V	**Terminal block**	3 poles
Type of electric cable installed	Yes, Double phase	**Plug**	(B) NEMA 14-50P
Power supply cable length	47 1/4 "		

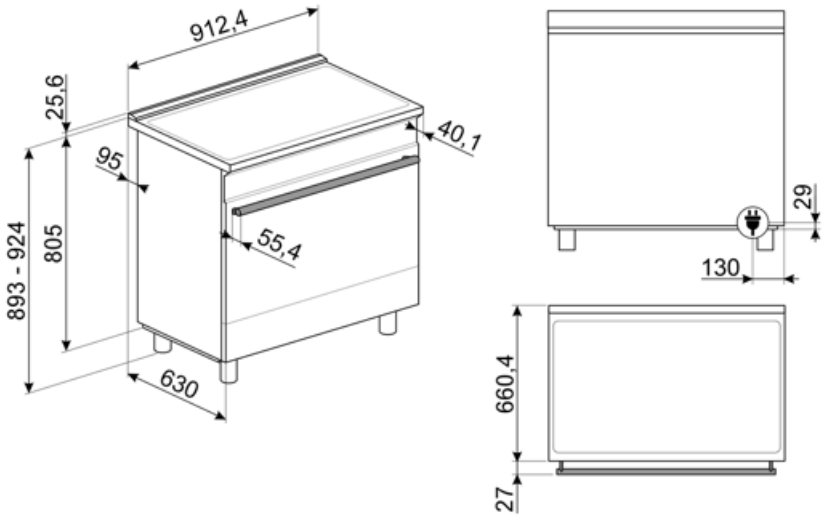

Compatible Accessories



GRILLPLATE

Universal griddle for induction, gas, ceramic and electric hobs. Non-stick surface ideal for cooking meat, cheese and vegetables. Dimensions: 410 x 240 mm.

KITBGSPR36X



PALPZ

Pizza shovel with folding handle. Dimensions L31.5 x H32.5 cm. Easy and convenient to use and store. Perfect for serving pizza, bread and savory pastries in a safe and professional way.



SFLK1

Child lock



TPKPLATE

Universal plate for induction, gas, ceramic and electric hobs. Non-stick surface ideal for cooking fish, eggs and vegetables. Dimensions: 410 X 240 mm.

GT3T



Totally extractable telescopic guides

KITTKSPR36

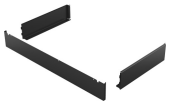

Plinth, 90cm, three sides, black, suitable for SPR cookers 36''

SCRP



Non-scratch hob scraper - suitable for induction and ceramic hobs

STONE9



Rectangular pizza stone, suitable for 90cm wide ovens. Dimensions W64 x H2.3 x D37.5cm. Ideal for cooking pizza with the same aroma and crispness as are typical of a wood-fired oven. Can also be used for baking bread, focaccias and other recipes such as pies and flans or biscuits

Alternative products



SPR36UIMAN

Colour: Matt Black



SPR36UIMANX

Colour: Stainless steel



SPR36UIMMW

Colour: Matt White

Symbols glossary



A: Product drying performance, measured from A+++ to D / G depending on the product family



Air cooling system: to ensure a safe surface temperatures.



Triple glazed doors: Number of glazed doors.



Fan assisted base: the mix of fan and lower heating element alone allows to finish cooking foods already cooked on the surface but not internally more quickly. This system is recommended to finish cooking foods that are already well cooked on the surface, but not internally, which therefore require a moderate higher heat. Ideal for any type of food.



Static: Traditional cooking suitable for the preparation of one dish at a time. The fan is not active and the heat comes from below and from above at the same time. Static cooking is slower and more delicate, ideal in order to get well cooked and dry dishes even inside. Ideal for cooking all types of roasts, fatty meats, bread, filled cakes.



Grill: Very intense heat coming only from above from a double heating element. The fan is not active. Provides excellent grilling and gratinating results. Used at the end of cooking, it gives a uniform browning to dishes.



Fan grill: very intense heat coming only from above from a double heating element The fan is active. It allows the optimal grilling of thickest meats. Ideal for large cuts of meat.



Overheat protection: The safety system that automatically turns off the hob in case of overheating of the control unit.



Power booster: option allows the zone to work at full power when very intense cooking is necessary.



Defrost by time: Manual defrost function. At the end of the set duration, the function stops.



Ever Clean Enamel: Ever Clean enamel is applied electrostatically, corner to corner and edge to edge to prevent cracking or cracks over time. It is a particular pyrolytic enamel, resistant to acids which, in addition to being pleasantly bright, promotes greater cleaning of the oven walls, thanks to its lower porosity. It is baked at over 850 ° C and slowly polymerized at a scientifically determined rate to ensure uniform depth and strength Ever Clean enamel creates an impeccable finish both on the inside of the oven and on the trays, making the surfaces of the oven incredibly easy to maintain over time as it reduces the adhesion of fat during cooking



Fan assisted: Intense and homogeneous traditional cooking, also suitable for complex recipes. The fan is active and the heat comes from below and from above at the same time. Ventilated cooking ensures a faster and more homogeneous result, leaving fragrant foods outside and moister inside. Ideal for baked pasta, biscuits, roasts and cobblers.



Circulaire: it is the perfect function for cooking all types of dishes in a more delicate way. The heat comes from the back of the oven and is distributed quickly and evenly The fan is active. It is also ideal for cooking on multiple levels without mixing smells and flavors.



Half grill: For rapid cooking and browning of foods. Best results can be obtained by using the top shelf for small items, the lower shelves for larger ones, such as chops or sausages. For half grill heat is generated only at the centre of the element, so is ideal for smaller quantities.



Pizza function: Specific function for cooking pizza in a pan. It allows to obtain a pizza that is soft inside and crispy outside with the topping perfectly cooked, not dry and not burnt.



Induction: The work of these hobs is based on the principle of electromagnetic induction. The heat is generated directly in the bottom of the pan during its contact with the hob.

All glass inner door: All glass inner door, a single flat surface which is simple to keep clean.

The inner door glass: can be removed with a few quick movements for cleaning.

Side lights: Two opposing side lights increase visibility inside the oven.

Automatic opening: some models have Automatic opening door when the cycle is finished which is a perfect solution for handle-less kitchen units as no handle is needed. For safety reasons, the door locks automatically when the machine is in use to avoid it being opened inadvertently.

Overfill protection: The special overfill protection shuts down the stove in the presence of overflow of liquids.

Indication of residual heat: After the glass ceramic hob is switched off the residual heat indicator shows which of the heating zones still remains hot. When the temperature drops below 60 ° C, the indicator goes out.

The oven cavity has 5 different cooking levels.

Soft close: all models are equipped with advanced function of smooth closing of the door, which allows the device to close smoothly and quietly.

Timer: All ceramic hobs have a timer which automatically ends cooking after a preset time.

Vapor Clean: a simple cleaning function using steam to loosen deposits in the oven cavity.

The capacity indicates the amount of usable space in the oven cavity in litres.

4.3 inch display with LED technology, usability with knobs + 3 touch keys

Knobs control

Automatic merge of zones for a bigger area