SR60GHS

Product Family	Hob
Built-in	Traditional
Dimensions	60 cm
Power supply	Gas
Type	Gas
EAN code	8017709179526



Aesthetics

Aesthetics	Cucina
Colour	Stainless steel
Finishing	Brushed
Material	Stainless Steel
Type of steel	Brushed
Pan stands	Cast iron
Burners	Smeg Contemporary
Burner Material	Aluminium
Type of control setting	Control knobs
Control knobs position	Front
No. of controls	4
Controls colour	Silver
Logo	Silk screen
Serigraphy colour	Black

Program / Functions

No. of gas cook zones	4
Total no. of cook zones	4

Options

Standard cut out	478-482x555-560 mm

Technical Features

UR

Left - Gas - UR - 3.90 kW
Rear centre - Gas - Semi Rapid - 1.70 kW
Front centre - Gas - AUX - 1.10 kW
Right - Gas - Rapid - 2.60 kW

Gas safety valves	Yes	**Automatic Ignition**	Yes

Electrical Connection

Nominal power (W)	1 W	**Frequency (Hz)**	50/60 Hz
Voltage (V)	220-240 V	**Power supply cable length**	120 cm
Type of electric cable	Single phase	**Plug**	No

Gas Connection

Gas Type	G20 Natural gas	**Other gas connections provided**	Conical
Gas connection	Cilindrical		
Other gas nozzles included	G30 GPL Liquid gas	**Gas connection rating (W)**	9300 W

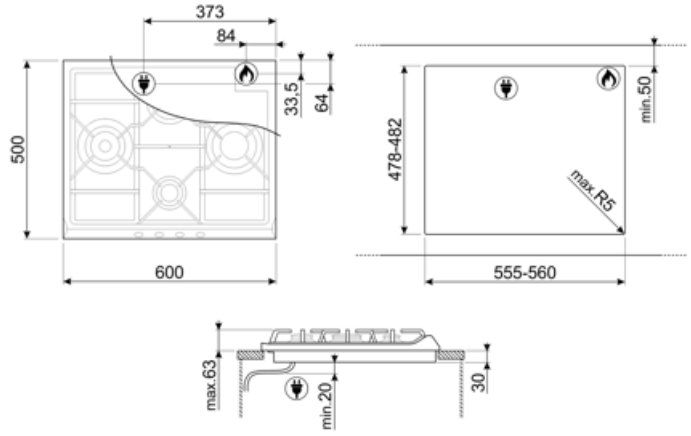

Compatible Accessories



6MP700AO

Hob knobs set - Cortina Anthracite/Old brass



6MP700BS

Hob knobs set - Cortina Silver/Silver



6MP700PO

Hob knobs set - Cortina Cream/Old brass



6MPF2465X

Hob knobs set - Cucina

Symbols glossary



Standard installation: Traditional installation in tabletop, suitable for any kitchen sets



Knobs control



Ultra rapid burners: Powerful ultra rapid burners offer up to 5kw of power.



Heavy duty cast iron pan stands: for maximum stability and strength.



CUT_OUT_STANDARD_72dpi