SRV532GH3

Product Family	Hob
Built-in type	Traditional
Dimensions	30 cm
Power supply	Gas
Type	Gas
EAN code	8017709111229

Aesthetics

Aesthetic	Contemporânea
Colour	Stainless steel
Acabamento	Satin
Material	Stainless Steel
Type of steel	Brushed
Pan stands	Cast iron
Pan Stand Coating	No
Burners	Smeg Contemporary
Burners Material	Alluminium
Burner Coating	No
Type of control setting	Control knobs
Control knob position	Front
No. of controls	2
Controls colour	Steel effect
Illuminated control knobs	No
Control knob protection	No

Program / Functions

No. of gas cook zones	2
Total no. of cook zones	2

Options

Corte padrão	478-482x252-256 mm

Technical Features

Front-centre
Rear-centre - 3.30 kW

Gas safety valves	Yes	**Automatic Ignition**	Yes

Electrical Connection

Plug	No	**Ficha elétrica**	No
Comprimento do cabo de alimentação	120 cm		

Gas Connection

Gas Type	G20 Natural gas	**Gas connection rating (W)**	4400 W
Ligação ao gás	Ligação ao gás cilíndrica	**Distância horizontal para ligação do gás**	57 mm
Other gas nozzles included	G30 GPL Liquid gas	**Distância vertical para ligação do gás**	59 mm
Other gas connections provided	Conical		

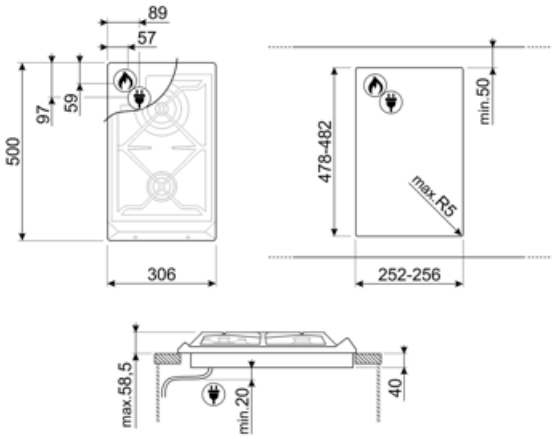

Compatible Accessories

6MP700AO

Conjunto de botões para placa - Cortina Antracito/Latão antigo

6MP700AX

Conjunto de botões para placa - Cortina Antracito/Prata

6MP700BS

Conjunto de botões para placa - Prata Cortina/Prata

6MP700PO

Conjunto de botões para placa - Creme Cortina/Latão velho

6MP800P

6MPF2465X

Conjunto de botões para placa - Seleção

BB3679

Grelha de ferro fundido

C30CX/1

Tampa de vidro com armação de aço inoxidável adequada para placas de 30 cm controle frontal.

GRW

Suporte para wok

TPK

Placa grelhadora de aço inoxidável para cozinhar pratos Teppanyaki

Symbols glossary

Instalação padrão: Instalação tradicional em tampo de mesa, adequado para qualquer conjunto de cozinha

Suportes de ferro fundido para serviço pesado: para máxima estabilidade e resistência.

UR

Queimadores ultrarrápidos: Queimadores ultra-rápidos potentes oferecem até 5kw de potência.

Controle dos botões

Benefit (TT)

Gas hobs

Consistent heat source control and easy, immediate temperature adjustment

Equipped with a thermocouple, the gas supply is cut off if the flame is extinguished for greater safety.

Inox

Maximum resistance even at high temperatures: the stainless steel surface ensures durability and deformation resistance, withstanding thermal shocks without damage

Cast iron

Solid and sturdy, easy to clean and maintain every day, thanks to the cast-iron pan supports—an emblem of long-lasting efficiency and durability.

Smeg Contemporanea

Optimal cooking with every dish: burners combine high performance, efficiency, and practicality, ensuring precise, even results even with intensive use.

Accurate power adjustment via knobs, for more precise cooking level control

Control knob position frontal

Instant and intuitive control thanks to front controls, easily accessible for practical use.

Fits even the smallest spaces: Domino modules let you customize the cooktop according to your needs, optimizing space in compact kitchens.

Gas safety valves

Automatic protection against gas leaks: the thermocouple stops gas flow in the absence of flame, ensuring a safe environment even during unexpected shutdowns.