SRV596GH5

Product Family	Hob
Built-in type	Traditional
Dimensions	90 cm
Power supply	Gas
Type	Gas
EAN code	8017709110505



Aesthetics

Aesthetic	Contemporanea
Colour	Stainless Steel
Finishing	Satin
Material	Stainless Steel
Type of steel	Brushed
Pan stands	Cast iron
Type of control setting	Control knobs
Control knob position	Front
No. of controls	6
Controls colour	Silver
Logo	Embossed
Alternative colours available	Beige, Terre de France

Program / Functions

No. of gas cook zones	5
Total no. of cook zones	5

Options

Worktop Cut-Out	478-482x839-844 mm

Technical Features

UR

Front-left - Gas - AUX - 1.10 kW
Rear-left - Gas - Rapid - 3.10 kW
Central - Gas - 2UR (dual) - 5.00 kW
Rear-right - Gas - Semi Rapid - 1.70 kW
Front-right - Gas - Semi Rapid - 1.70 kW

Gas safety valves	Yes	**Automatic Ignition**	Yes

Electrical Connection

Power supply cable length	120 cm	**Plug**	Not present

Gas Connection

Gas Type	G20 Natural gas	**Gas connection rating (W)**	12400 W
Gas connection	Cilindrical	**Gas connection distance, horizontal**	86 mm
Other gas connections provided	Conical	**Gas connection distance, vertical**	45 mm

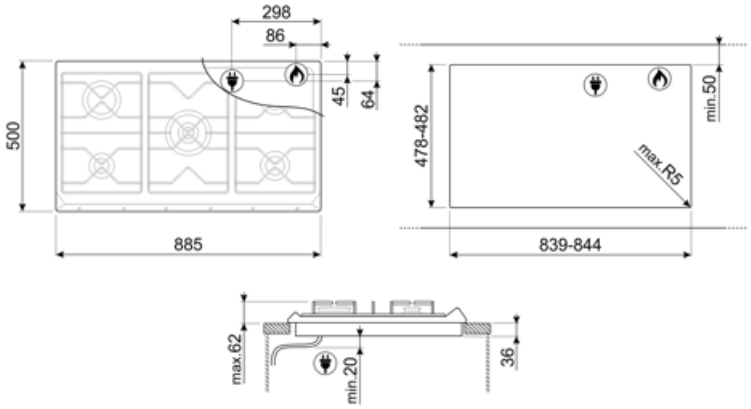

Compatible Accessories



6MP700AO

Hob knobs set - Cortina Anthracite/Old brass



6MP700BS

Hob knobs set - Cortina Silver/Silver



6MP700PO

Hob knobs set - Cortina Cream/Old brass



6MP800P

6MPF2465X

Hob knobs set - Selezione



GGB90

Cast Iron pan stands suitable for 90 cm hobs.

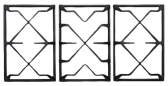

GRW



Wok support

Symbols glossary



Standard installation: Traditional installation in tabletop, suitable for any kitchen sets.



Heavy duty cast iron pan stands: for maximum stability and strength.



Ultra rapid burners: Powerful ultra rapid burners offer up to 5kw of power.



Knobs control