SRV876POGH

Product Family	Hob
Built-in type	Traditional
Dimensions	70/75 cm
Power supply	Gas
Type	Gas
EAN code	8017709233297

Aesthetics

Aesthetic	Coloniale
Colour	Cream
Material	Enamelled
Pan stands	Cast iron
Type of control setting	Control knobs
Control knob position	Front
No. of controls	6
Controls colour	Antique brass
Logo	Silk screen
Serigraphy colour	Gold
Alternative colours available	Anthracite, Beige, Copper

Program / Functions

No. of gas cook zones	5
Total no. of cook zones	5

Options

Worktop Cut-Out	478-482x555-560 mm

Technical Features

UR

Front-left - Gas - AUX - 1.10 kW
Rear-left - Gas - Rapid - 2.60 kW
Central - Gas - 2UR (dual) - 5.00 kW
Rear-right - Gas - Semi Rapid - 1.70 kW
Front-right - Gas - Semi Rapid - 1.70 kW

Gas safety valves	Yes	**Automatic Ignition**	Yes

Electrical Connection

Electrical connection rating (W)	1 W	**Frequency (Hz)**	50/60 Hz
Voltage (V)	220-240 V	**Power supply cable length**	120 cm
Type of electric cable installed	Yes, Single phase	**Plug**	Not present

Gas Connection

Gas Type	G20/G25 natural gas	**Other gas connections provided**	Conical
Gas connection	Cilindrical	**Gas connection rating (W)**	11900 W

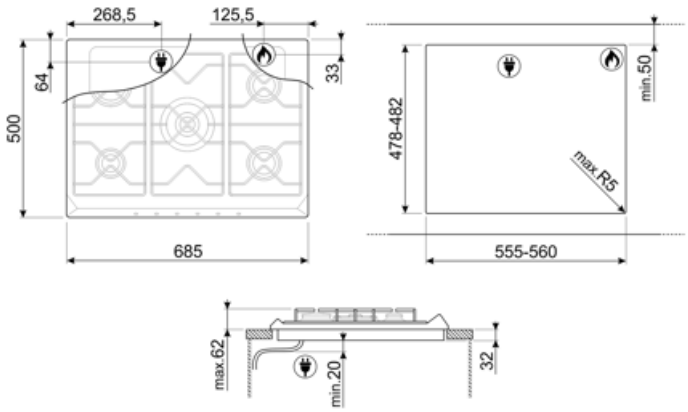

Compatible Accessories

6MP700AO

Hob knobs set - Cortina Anthracite/Old brass

6MP700PO

Hob knobs set - Cortina Cream/Old brass

6MPF2465X

Hob knobs set - Selezione

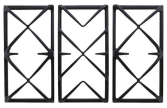

GGB70-1

Cast Iron pan stands suitable for 70 cm hobs.

6MP700BS

Hob knobs set - Cortina Silver/Silver

6MP800P

C70CNE-2

Black cover suitable for 70 cm hobs with frontal controls.

GRW

Wok support

Alternative products

SRV876AVOGH2

Colour: Oats

SRV876AOGH

Colour: Anthracite

Symbols glossary

Standard installation: Traditional installation in tabletop, suitable for any kitchen sets.

CUT_OUT_STANDARD_72dpi

Knobs control

Heavy duty cast iron pan stands: for maximum stability and strength.

Ultra rapid burners: Powerful ultra rapid burners offer up to 5kw of power.