SSA60MX2

Cooker size	60x60 cm
N. of cavities with energy label	1
Cavity heat source	ELECTRICITY
Hob type	Gas
Type of main oven	Thermo-ventilated
Cleaning system main oven	Vapor Clean
EAN code	8017709333690
Energy efficiency class	A



Aesthetics

Design	Standard
Command panel finish	Stainless steel
Aesthetic	Classica
Logo	Assembled
Colour	Stainless steel
Logo position	Facia below the oven
Finishing	Satin
Upstand	Yes
Series	Concerto
Hob colour	Stainless steel
Type of pan stands	Cast Iron

Type of control setting hob	Control knobs
Control knobs	Smeg Classic
Controls colour	Stainless steel
No. of controls	7
Serigraphy colour	Black
Door	With 2 horizontal strips
Glass type	Eclipse
Handle	Smeg Classic
Handle Colour	Brushed stainless steel
Storage compartment	Door
Feet	Silver

Programs / Functions

No. of cooking functions 6

Traditional cooking functions

- Static
- Eco
- Large grill
- Fan grill (large)
- Base
- Fan assisted base

Cleaning functions

- Vapor clean

Hob technical features

UR

Total no. of cook zones 4

Front left - Gas - UR - 3.50 kW

Rear left - Gas - Semi Rapid - 1.75 kW

Rear right - Gas - Semi Rapid - 1.75 kW

Front right - Gas - AUX - 1.00 kW

Type of gas burners	Standard	**Gas safety valves**	Yes
Automatic electronic ignition	Yes	**Burner caps**	Matt black enamelled

Main Oven Technical Features



Fan number	1	**Removable inner door**	Yes
Net volume of the cavity	70 l	**Total no. of door glasses**	3
Gross volume, 1st cavity	79 l	**No.of thermo-reflective door glasses**	2
Cavity material	Ever Clean enamel	**Safety Thermostat**	Yes
No. of shelves	5	**Cooling system**	Tangential
Type of shelves	Metal racks	**Usable cavity space dimensions (HxWxD)**	360X460X425 mm
Light type	Halogen	**Temperature control**	Electro-mechanical
Light Power	40 W	**Lower heating element power**	1200 W
Cooking time setting	Contaminuti + fine cottura	**Upper heating element - Power**	1000 W
Light when oven door is open	Yes	**Grill elememt**	1700 W
Door opening	Flap down	**Large grill - Power**	2700 W
Removable door	Yes	**Circular heating element - Power**	2000 W
Full glass inner door	Yes	**Grill type**	Electric

Options Main Oven

End of cooking acoustic alarm	Yes	**Maximum temperature**	260 °C
Minimum Temperature	50 °C		

Accessories included for Main Oven & Hob

Rack with back and side stop	1	**40mm deep tray**	1

Electrical Connection

Electrical connection rating	2200 W	**Power supply cable length**	115 cm
Current	10 A	**Frequency**	50/60 Hz
Voltage	220-240 V	**Terminal block**	3 poles
Installed electric cable	Yes, Single phase	**Plug**	Not present

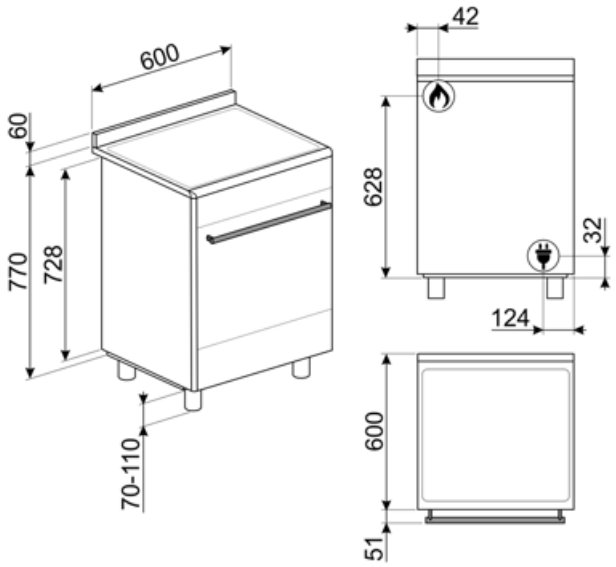

Compatible Accessories



AIRFRY2

Air fryer tray. Ideal for recreating traditional frying in the oven, but with fewer calories and less fat. It allows you to cook quickly and simply dishes such as French fries, fried vegetables and fish, ensuring perfect browning and crispiness.



BBQ

Double sided plate BBQ. Suitable for recreating succulent and crispy dishes in the oven with the typical taste of grilled cooking. The ribbed side is particularly suitable for meats and cheeses. The smooth side for fish, seafood and vegetables.



BN640

Enamelled tray suitable for 45cm and 60cm ovens. Depth 540 mm. Perfect for cooking and roasting meat and fish in sauces. Also ideal for experimenting with lighter and crunchy side dishes



GTP

Partially extractable telescopic guides (1 level), suitable for traditional ovens. Made in stainless steel, they guarantee stability and facilitate the smooth extraction of the trays.



KITH95

Height extension feet (950mm), stainless steel, suitable for Concerto cookers (911-966mm)



KITPDQ

Height reduction feet (850mm), stainless steel, for Concerto cookers (850-881mm)



AL60

Upstand suitable for 60cm Concert cookers with gas hob MF oven



BN620-1

Enamelled tray suitable for 45cm and 60cm ovens. Depth 20 mm. Perfect for a wide range of savoury and sweet baking.



BNP608T

Teflon-coated tray, 8mm depth, to be placed on the grid



GTT

Totally extractable telescopic guides (1 level), suitable for traditional ovens. Made in stainless steel, they guarantee stability and facilitate the smooth extraction of the trays.



KITP60X9

Splashback, stainless steel, suitable for 60X60cm Concerto cookers with pyro and MF oven



PALPZ

Pizza shovel with folding handle. Dimensions L31.5 x H32.5 cm. Easy and convenient to use and store. Perfect for serving pizza, bread and savory pastries in a safe and professional way.



SFLK1

Child lock

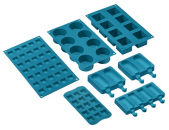

SMOLD

Set of 7 silicone moulds for ice creams, ice lollies, pralines, ice cubes or to portion food. Usable from -60°C to +230°C

Symbols glossary



Heavy duty cast iron pan stands: for maximum stability and strength.



Installation in column: Installation in column



Triple glazed doors: Number of glazed doors.



Fan assisted base: the mix of fan and lower heating element alone allows to finish cooking foods already cooked on the surface but not internally more quickly. This system is recommended to finish cooking foods that are already well cooked on the surface, but not internally, which therefore require a moderate higher heat. Ideal for any type of food.



Base: the heat comes only from the bottom of the cavity. The fan is not active. Ideal for sweet and savory pies, cobblers and pizzas. Designed to complete cooking and make food more crunchy This symbol in gas ovens indicates the gas burner.



Grill: Very intense heat coming only from above from a double heating element. The fan is not active. Provides excellent grilling and gratinating results. Used at the end of cooking, it gives a uniform browning to dishes.



All glass inner door: All glass inner door, a single flat surface which is simple to keep clean.



Side lights: Two opposing side lights increase visibility inside the oven.





Air cooling system: to ensure a safe surface temperatures.



Ever Clean Enamel: Ever Clean enamel is applied electrostatically, corner to corner and edge to edge to prevent cracking or cracks over time. It is a particular pyrolytic enamel, resistant to acids which, in addition to being pleasantly bright, promotes greater cleaning of the oven walls, thanks to its lower porosity. It is baked at over 850 ° C and slowly polymerized at a scientifically determined rate to ensure uniform depth and strength Ever Clean enamel creates an impeccable finish both on the inside of the oven and on the trays, making the surfaces of the oven incredibly easy to maintain over time as it reduces the adhesion of fat during cooking



Static: Traditional cooking suitable for the preparation of one dish at a time. The fan is not active and the heat comes from below and from above at the same time. Static cooking is slower and more delicate, ideal in order to get well cooked and dry dishes even inside. Ideal for cooking all types of roasts, fatty meats, bread, filled cakes.



ECO: low energy consumption cooking: this function is particularly suitable for cooking on a single shelf with low energy consumption. It is recommended for all types of food except those that can generate a lot of moisture (for example vegetables). To achieve maximum energy savings and reduce time, it is recommended to put the food in the oven without preheating the cooking compartment



Fan grill: very intense heat coming only from above from a double heating element The fan is active. It allows the optimal grilling of thickest meats. Ideal for large cuts of meat.



The inner door glass: can be removed with a few quick movements for cleaning.



Automatic opening: some models have Automatic opening door when the cycle is finished which is a perfect solution for handle-less kitchen units as no handle is needed. For safety reasons, the door locks automatically when the machine is in use to avoid it being opened inadvertently.



The oven cavity has 5 different cooking levels.



Vapor Clean: a simple cleaning function using steam to loosen deposits in the oven cavity.



Knobs control



Ultra rapid burners: Powerful ultra rapid burners offer up to 5kw of power.



The capacity indicates the amount of usable space in the oven cavity in litres.