SSA91GGBL2

Cooker size	90x60 cm
N. of cavities with energy label	1
Cavity heat source	GAS
Hob type	Gas
Type of main oven	Gas with gas grill
EAN code	8017709339012
Energy efficiency class	A



Aesthetics

Design	Standard
Command panel finish	Enamelled metal
Aesthetic	Classica
Logo	Embossed
Colour	Black
Logo position	Facia below the oven
Finishing	Glossy
Upstand	Yes
Series	Concerto
Hob colour	Black enamel
Type of pan stands	Cast Iron

Type of control setting hob	Control knobs
Control knobs	Smeg Classic
Controls colour	Stainless steel
No. of controls	8
Serigraphy colour	Black
Door	Full glass
Glass type	Black
Handle	Smeg Classic
Handle Colour	Brushed stainless steel
Storage compartment	Door
Feet	Stainless steel

Hob technical features

UR

Total no. of cook zones 5

Front left - Gas - Rapid - 2.90 kW
Rear left - Gas - Semi Rapid - 1.75 kW
Central - Gas - UR - 4.00 kW
Rear right - Gas - Semi Rapid - 1.75 kW
Front right - Gas - AUX - 1.00 kW

Type of gas burners	Standard

Gas safety valves	Yes
Burner caps	Matt black enamelled

Automatic electronic ignition	Yes

Main Oven Technical Features



No. of lights	2	**Door opening**	Flap down
Fan number	2	**Removable door**	Yes
Net volume of the cavity	105 l	**Full glass inner door**	Yes
Gross volume, 1st cavity	129 l	**Total no. of door glasses**	2
Cavity material	Ever Clean enamel	**No.of thermo-reflective door glasses**	1
No. of shelves	5	**Cooling system**	Tangential
Type of shelves	Metal racks	**Usable cavity space dimensions (HxWxD)**	340x724x418 mm
Light type	Halogen	**Temperature control**	Mechanical
Light Power	40 W	**Grill type**	Gas
Cooking time setting	Contaminuti + fine cottura		

Options Main Oven

End of cooking acoustic alarm	Yes	**Maximum temperature**	260 °C
Minimum Temperature	80 °C		

Accessories included for Main Oven & Hob

Cast iron wok support	1	**40mm deep tray**	1
Moka stand	1	**Grill mesh**	1
Rack with back and side stop	1		

Electrical Connection

Electrical connection rating	120 W	**Power supply cable length**	110 cm
Current	1 A	**Frequency**	50/60 Hz
Voltage	220-240 V	**Terminal block**	3 poles
Installed electric cable	Yes, Single phase	**Plug**	Not present

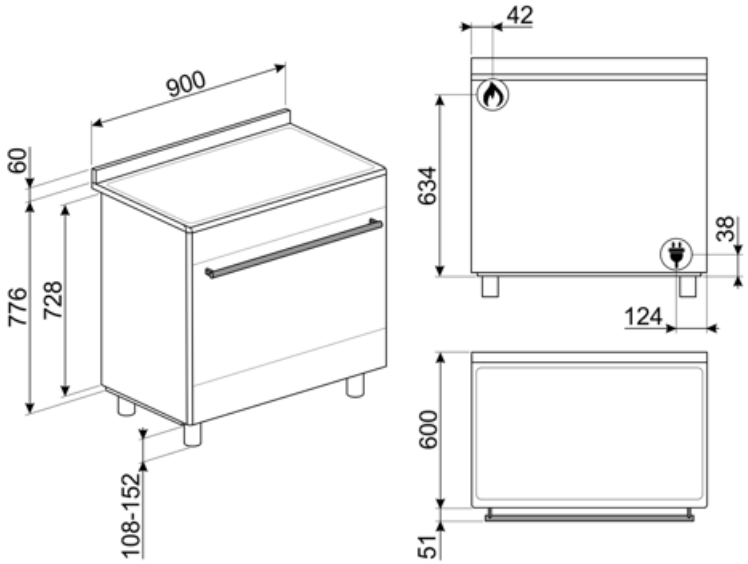
900
60
776
728
108-152
42
634
38
124
600
51

Compatible Accessories



GTP

Partially extractable telescopic guides (1 level), suitable for traditional ovens. Made in stainless steel, they guarantee stability and facilitate the smooth extraction of the trays.



SFLK1

Child lock



GTT

Totally extractable telescopic guides (1 level), suitable for traditional ovens. Made in stainless steel, they guarantee stability and facilitate the smooth extraction of the trays.

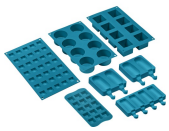

SMOLD

Set of 7 silicone moulds for ice creams, ice lollies, pralines, ice cubes or to portion food. Usable from -60°C to +230°C

Symbols glossary



Heavy duty cast iron pan stands: for maximum stability and strength.





Installation in column: Installation in column



Air cooling system: to ensure a safe surface temperatures.



Double glazed doors: Number of glazed doors.



Ever Clean Enamel: Ever Clean enamel is applied electrostatically, corner to corner and edge to edge to prevent cracking or cracks over time. It is a particular pyrolytic enamel, resistant to acids which, in addition to being pleasantly bright, promotes greater cleaning of the oven walls, thanks to its lower porosity. It is baked at over 850 ° C and slowly polymerized at a scientifically determined rate to ensure uniform depth and strength Ever Clean enamel creates an impeccable finish both on the inside of the oven and on the trays, making the surfaces of the oven incredibly easy to maintain over time as it reduces the adhesion of fat during cooking



Gas ovens offer instantaneous heat control, reduced cooking times and the ability to bake at much lower temperatures than electric ovens.



All glass inner door: All glass inner door, a single flat surface which is simple to keep clean.



Side lights: Two opposing side lights increase visibility inside the oven.



Automatic opening: some models have Automatic opening door when the cycle is finished which is a perfect solution for handle-less kitchen units as no handle is needed. For safety reasons, the door locks automatically when the machine is in use to avoid it being opened inadvertently.



The oven cavity has 5 different cooking levels.



Ultra rapid burners: Powerful ultra rapid burners offer up to 5kw of power.



The capacity indicates the amount of usable space in the oven cavity in litres.



Knobs control