ST323PM



Product familie	Vaatwasser
Commerciële breedte	60 cm
Nishoogte	82 cm
Installatie	Volledig geïntegreerd
Deurpaneel	Niet voorzien
Aantal manden	3 met FlexiDuo besteklade
Motor	Inverter 2.0
Type	Semi professional
EAN-code	8017709307363

Programma's

Aantal programma's	10+1	**Auto sensor 45-65**	Ja
Wastemperatuur	45, 50, 65, 70, 75 °C	**Mix**	Ja
Weken	Ja	**Intensief**	Ja
Glazen	Ja	**Automatische reiniging**	Ja
Snel - Volledig 60'	Ja	**Hygiëne 99,9%**	Ja
ECO	Ja	**Ultra Express**	Ja

Professional programs

Mix PRO	Yes	**Full express PRO**	Yes
Ultra rapid	Yes	**Crystal Pro**	Ja
Intensive Pro	Yes		

Opties

Dry Assist+	Ja	**Professional optie**	Ja
Start uitstel optie	Tot 24 uur, i.c.m. automatisch spoelen	**Intensive Wash optie**	
FlexiZone ½ (halve beladingsmogelijkheid)	Ja		

Korven

Kleur korven	Grijs
Kleur korfcomponenten	Grijs
Handgreep	In plastic with stainless steel insert on upper and lower basket
Bovenste mand	Met 3 neerklapbare rekken
Glass holder	Ja
Aanpasbare hoogte bij bovenste mand	3 niveaus
Sliding Guides Extra Glide	Ja
Grootste bord in bovenste mand	19,0 cm
Onderste mand	Met 4 neerklapbare rekken
Onderste mand met anti-druppel systeem	Ja
Grootste bord in onderste mand	30,0 cm
Kleur interne onderdelen	Blauw
Bestekmandje	No

Technische specificaties

Breedte product (mm)	598 mm
Diepte product (mm)	545 mm
Type display	LED display
Hoogte product (mm)	818 mm
Bediening	Elektronisch
Display	Instelling start uitstel, Programmaduur indicatie
Grafische weergave programma's	Symbolen
Indicator aan/uit	Ja
Indicator zout	Indicator (lampje)
Indicator glansspoelmiddel	Indicator (lampje)
Indicator einde cyclus	Active Light
Auto switch-off	Yes
Wassysteem	Planetarium wassysteem
Derde sproeiarm	Enkel
Water verzachter	Elektronisch instelbaar
Aquatest	Ja
Aquastop	Total Aquastop
Water toevoer	Enkel; koud en warm water tot 60°C - energiebesparing tot 35%
Maximale waterhardheid	100°fH;58°dH
Droogsysteem	Natuurlijk condensatiedrogen, met DryAssist + automatische deuropening einde cyclus
Bescherming tegen stoom	Van kunststof
Materiaal kuip	Inox
Filter	Inox
Warmte element	Ja
Scharnieren	Flexifit scharnieren
Min. and max. frontal panel weight	2,5 - 11 kg
Min. and max plinth height	50 - 215 mm
Aanpasbare voetjes	7 cm, van 820 tot 890 mm
Additional gaskets	Yes, with stainless steel plate
Bedekking achter	Ja
Diepte vaatwasser met open deur (mm)	1146 mm
Achterste voetjes aanpasbaar vanaf voorkant	Ja
Bovenbedekking	Van kunststof

Prestaties/Energie label - Reg. 2019

Energie-efficiëntieklasse	C

Energy consumption [per 100 cycles, based on the eco programme]	75 kWh	**Duur langste programma**	4:25 h:min
Rated capacity (ps)	14	**Geluidsniveau**	42 dB(A) re 1 pW
Water verbruik (per cyclus)	10,5 litres	**Emissieklasse voor akoestisch luchtgeluid**	B
		Energy efficiency Index (EEI)	43,8

Elektrische aansluiting

Aansluitwaarde	5450 W	**Type of connection**	Eenfasig
Stroom	32 A	**Lengte voedingskabel**	200 cm
Spanning	220-240 V	**Stekker**	Nee
Frequentie	50 Hz		

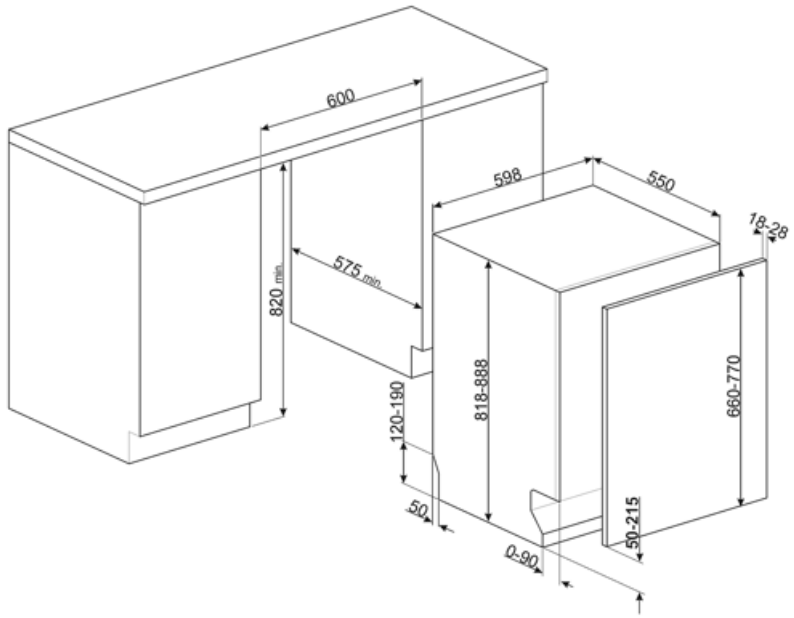

Compatible Accessories



KIT82CN



KIT82CX



KIT82SPRAN



KIT82SPRMW



KIT82SPRX

KITFLEXI



Kit for 60cm dishwashers with FlexiFit hinges for door panel weight >11 kg (max 15 kg 82 cm and 13,5 kg 86 cm)

KITGH

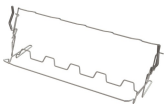

Kit glass holder. It has to be fitted on the first basket but only if there are foldable racks

KITPL60B



Toekick Kit in White colour with adjustable height and deepness. Can be installed over all the fully integrated and underbench models with variable fulcrum or flexifit hinges.

KITPL60N



Toekick Kit in Black colour with adjustable height and deepness. Can be installed over all the fully integrated and underbench models with variable fulcrum or flexifit hinges.

KITPL60X



Toekick Kit in Stainless Steel with adjustable height and deepness. Can be fitted over all the fully integrated and underbench models with variable fulcrum or flexifit hinges.

KITPLV2



Kit extension for dishwasher and washing machine: lenght mt. 2

Symbols glossary



Activelight is an led light which projects a red spot onto the floor beneath the dishwasher when the appliance is in use.



The Aquatest sensor is an electronic sensor that measures the degree of water transparency at the end of the initial soaking phase. ased on the values measured, the sensor sets the most suitable programme, thus obtaining the best washing results with the minimum amount of water.



To improve the drying of dishes without leaving stains.



82 cm high



Delay Timer: Option to postpone the start of the desired programme by up to 24 hours in order to programme the dishwasher to run at the desired time.



FlexiDuo: The FlexiDuo 3rd cutlery basket allows you to arrange cutlery or small cups, ladles, or bulky utensils however you like: it consists of two separate and moveable modules.



Door de FlexiFit scharnieren kan het keukenpaneel over de vaatwasserdeur schuiven, waardoor een minimale keukenplinthoogte van 5 cm mogelijk is.



FlexiZone: The ½ load flexizone allows you to wash a reduced load saving energy, water and time and there are no restrictions on where the items are placed.



The ExtraGlide guides system makes the second basket run even smoother and softer. It facilitates movement even when fully loaded, and thanks to the increased excursion, facilitates the insertion of dishes into the basket.



Noise Level: Excellent insulation and special devices keep noise to a minimum.



Noise Level: Excellent insulation and special devices keep noise to a minimum.



The Planetarium washing system, with high rotations per minute, guarantees complete coverage of the tank, thanks to the simultaneous rotation of base and sprayers, and excellent washing results.



Het automatische programma regelt de lengte van een cyclus afhankelijk van de behoefte aan voorwas en het aantal benodigde spoelbeurten.



Crystals: The Crystals programme is dedicated to delicate dishes such as glasses and china.



Het ECO programma is een economische wascyclus die een kleine hoeveelheid water en energie gebruikt voor de meest milieuvriendelijke reinigingsoptie.



IntensivoProf: The Intensive program is recommended for heavily soiled pots and pans and dry residues to be washed quickly.



Het normaal programma is geschikt voor gemengde dagelijkse vaat en potten en patten, zonder specifieke aangekoekte etensresten.



Het weekprogramma zorgt voor een spoeling om te voorkomen dat vuil opdroogt.



Ultra Snel programma voor snelle cyclus van 16 min.



De UltraClean optie voert een laatste spoeling uit op een hoge temperatuur van 70°C die 99,9% van alle bacteriën wegneemt.



Professional: Option Professional enables to convert household appliances into semiprofessional ones due to the programs which significantly reduce washing time to obtain an astonishing 16 minutes cycle.



Quick Time: The Quick Time option can reduce the length of the wash cycle up to 55%.

14 place settings: Number of place settings.

Total Acquastop: In addition to the partial Acquastop protection present in all Smeg dishwashers, some models have an electronic device fitted to the water intake hose, which monitors water levels in the machine, detects leaks in the hose and switches off the water supply immediately when necessary.

System WaterSave ensures the best washing results with minimal water consumption depending on the model of dishwasher.

Voor normaal vervuilde gemengde ladingen zoals borden en pannen, zelfs met opgedroogde resten. De gerechten worden in 60 minuten gewassen en gedroogd.

De vaatwasser voert een automatische zelfreinigingscyclus uit

Special quick program for washing glasses.

The Dry Assist + option, in addition to saving energy, ensures perfect drying of the dishes by opening the door automatically at the end of the washing cycle.

Energie-efficiëntieklasse

HYGINE 99,9% Wasprogramma op hoge temperatuur. De 75° spoeling garandeert de verwijdering van 99,9% van de ziektekiemen en bacteriën.

Het werk gericht op continue verbetering heeft de creatie mogelijk gemaakt van de tweede generatie van de Inverter-motor 2.0, die wordt gekenmerkt door een grotere efficiëntie en duurzaamheid in de loop van de tijd, wat zeer hoge prestaties en een lager energieverbruik en een lager geluidsniveau mogelijk maakt.

Benefit (TT)

FlexiZone half-load option

Save water and energy with the FlexiZone Half Load option, which optimizes wash performance by adjusting water and energy consumption when washing smaller loads.

DELAY START

Improved flexibility and convenience with the Delay Start option, which allows cycles to be scheduled up to 24 hours in advance.

Active Light

Maximum control thanks to the light projected on the floor that indicates when the dishwasher is running and when the cycle is complete

Smeg dishwashers equipped with ActiveLight signal the appliance's activity status by projecting a light on the floor while the cycle is running. The light goes out at the end of the cycle, signalling that the dishwasher can be unloaded.

FlexiDuo

The flexible third basket provides additional space, adapting to the load to accommodate various types of dishes, ensuring optimal organization and efficient use of interior capacity

The third FlexiDuo basket consists of two separate sections that can be handled independently of each other, stacked and/or removed, offering loading flexibility for every need. Depending on the arrangement, it allows cups, tall glasses, bulky utensils and pots and pans to be placed in the upper basket.

Planetarium Wash System

Full and deep wash coverage thanks to the advanced movement of the spray arm, an innovation patented by Smeg

Smeg's patented Planetarium Wash System guarantees impeccable cleaning. With a simultaneous double movement of the sprayer and 65 rotations per minute, it reaches every nook and cranny for extraordinary results. Dishes, glasses and utensils will be perfectly clean in no time. An intelligent system where efficiency and style meet, delivering brilliant results effortlessly.

Turbidity sensor Aquatest

Enhanced energy efficiency and improved cleaning performance thanks to the AquaTest turbidity sensor, which detects water clarity and helps optimize the wash cycle

Flood protection system

Enhanced protection and peace of mind with Total Aqua Stop, an advanced leak detection system that automatically shuts off the water supply if a leak is detected beneath the drum or within the water intake hose.

Flexifit hinge system

Smooth-running door for optimal integration into the kitchen deisgn

The height of the plinth can vary from 5 cm to 21.5 cm, allowing it to fit perfectly into the cabinet.
Thanks to this solution, the dishwasher blends harmoniously into its surroundings, with the door and plinth perfectly aligned with the other kitchen furniture.

Extra Glide Telescopic Guides

Smoother and more stable loading and unloading operations

Extra Glide telescopic guides ensure smooth and safe extraction of the upper basket, even with heavy loads. The telescopic design ensures smooth, stable and silent movement, improving ergonomics and convenience. Ideal for optimising space and ease of use, they combine durability and comfort in every washing operation.

DryAssist+

The Dry Assist+ system of automatic door opening at the end of the cycle ensures fast and energy-efficient drying