STL251C



Product Family	Dishwashers
Commercial width	60 cm
Commercial height	82 cm
Installation	Fully-integrated built-in
Kitchen panel	Not supplied
N° baskets	2
EAN code	8017709306922

Programs

N. of programmes	5	**ECO**	Yes
Washing temperatures	45, 50, 65, 75 °C	**Mix**	Yes
Crystal	Yes	**Hygiene 99,9%**	Yes
Full express - 60 minutes	Yes		

Options

Delay timer option	3-6-9 hours	**Extra dry option**	Yes

Baskets

Basket colour	Grey	**Largest loadable dish in upper basket**	25,0 cm
Basket components colour	Grey	**Lower Basket**	With 2 foldable racks
Handle	In plastic on upper and lower basket	**Lower basket with anti-drip inserts**	Yes
Upper Basket	With central fixed racks	**Largest loadable dish in lower basket**	30,0 cm
Glass holder	Yes	**Colour Inner Components**	Blue
Height adjustment of the upper basket	On three levels (5 cm)	**Cutlery basket**	Yes

Technical Features



Width (mm)	598 mm
Depth (mm)	545 mm
Product Height (mm)	818 mm
Controls	Electronic
Programme graphics	Symbols
On/off indicator	Yes
Salt light indicator	Light
Rinse aid indicator	Light
End of cycle indicator	Acoustic signal
Washing system	Orbital
Third spray arm	Single
Water softener	With electronic setting
Flood protection system	Total Acquastop
Water supply	Single; cold/hot water max. 60°C - energysave with hot water up to 35%
Max water hardness	100°fH;58°dH
Drying system	Natural condenser drying, with Dry Assist + automatic door opening system at the end of the cycle
Steam protection	In plastic
Tub material	Stainless steel
Filter	Stainless steel
Concealed heating element	Yes
Hinges	Self balancing, Sliding, FLEXIFIT
Min. and max. frontal panel weight	2,5 - 11 kg
Min. and max plinth height	50 - 215 mm
Adjustable feet	7 cm, from 820 to 890 mm
Back cover	Yes
Depth of dishwasher with open door (mm)	1168 mm
Back feet adjustable from front	Yes
Top cover	In plastic

Performance / Energy Label - Reg. 2019

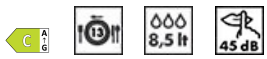

Energy Efficiency Class	C
Energy consumption [per 100 cycles, based on the eco programme]	73 kWh
Rated capacity (ps)	13
Water consumption [per cycle]	8,5 litres
Programme duration	4:40 h:min
Airborne acoustical noise emissions	45 dB(A) re 1 pW
Airborne acoustical noise emission class	C
Energy efficiency Index (EEI)	43,8

Electrical Connection

Connected power	1800 W
Current	10 A
Voltage	220-240 V
Frequency (Hz)	50 Hz
Type of connection	Single-phase
Power supply cable length	140 cm
Plug	(F;E) Schuko

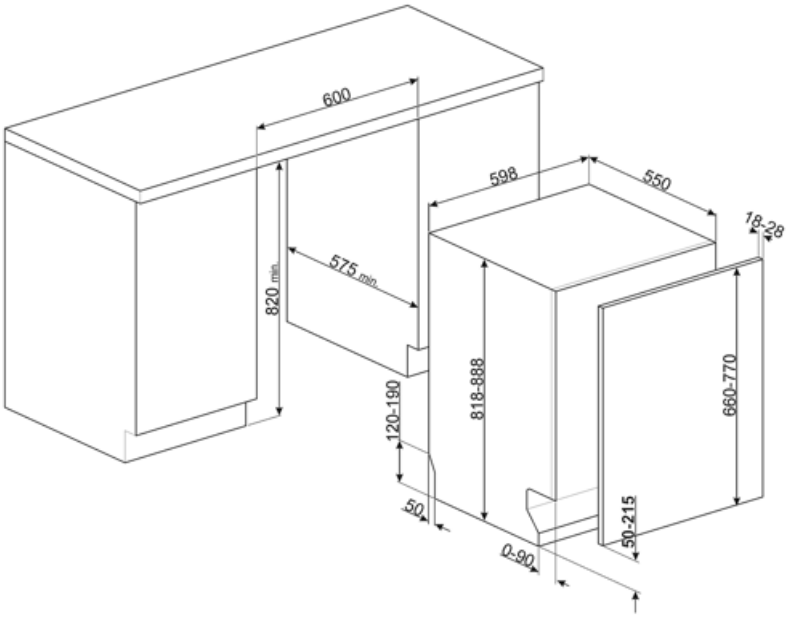
600
598
550
18-28
575 min.
820 min.
818-888
660-770
120-190
50
50-215
0-90

Compatible Accessories



KIT82CN



KIT82CX



KIT82SPRAN



KIT82SPRMW



KIT82SPRX

KITFLEXI



Kit for 60cm dishwashers with FlexiFit hinges for door panel weight >11 kg (max 15 kg 82 cm and 13,5 kg 86 cm)

KITGH

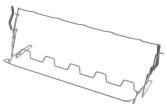

Kit glass holder. It has to be fitted on the first basket but only if there are foldable racks

KITPL60B



Toekick Kit in White colour with adjustable height and deepness. Can be installed over all the fully integrated and underbench models with variable fulcrum or flexifit hinges.

KITPL60N



Toekick Kit in Black colour with adjustable height and deepness. Can be installed over all the fully integrated and underbench models with variable fulcrum or flexifit hinges.

KITPL60X



Toekick Kit in Stainless Steel with adjustable height and deepness. Can be fitted over all the fully integrated and underbench models with variable fulcrum or flexifit hinges.

KITPLV2



Kit extension for dishwasher and washing machine: lenght mt. 2

Symbols glossary



To improve the drying of dishes without leaving stains.



82 cm high



The FlexiFit hinges allow the kitchen panel to slide over the dishwasher door, allowing a minimum kitchen plinth height of 5 cm.



Orbital wash system distributes water evenly throughout the 60cm dishwasher cavity, directing water with precision to ensure an excellent wash.



Eco: Eco, this economic wash programme uses a low amount of water and energy in order to provide the most environmentally friendly cleaning option.



13 place settings: Number of place settings.



System WaterSave ensures the best washing results with minimal water consumption depending on the model of dishwasher.



Quick wash cycle for normally soiled mixed loads such as dishes and pans, even with dried-on residues. Dishes are washed and dried in 60 minutes.



The work aimed at continuous improvement has allowed the creation of the second generation of the Inverter motor 2.0, characterised by greater efficiency and durability over time, which allows very high performance and a lower energy consumption and noise level.



Energy efficiency class C



Delay Timer: Option to postpone the start of the desired programme by up to 24 hours in order to programme the dishwasher to run at the desired time.



Noise Level: Excellent insulation and special devices keep noise to a minimum.



Crystals: The Crystals programme is dedicated to delicate dishes such as glasses and china.



Mix: The Mix programme is suitable for mixed crockery and everyday pots and pans, without any particular incrustation.



Total Acquastop: In addition to the partial Acquastop protection present in all Smeg dishwashers, some models have an electronic device fitted to the water intake hose, which monitors water levels in the machine, detects leaks in the hose and switches off the water supply immediately when necessary.



EXTRA DRY This option adds a hot rinse cycle that ensures improved drying.



HYGIENE 99.9% High-temperature washing programme. The 75° rinse guarantees the removal of 99.9% of germs and bacteria.

