STL252CH

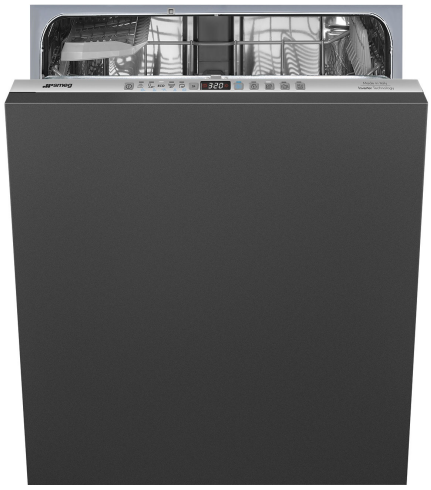

Product Family	Dishwashers
Commercial width	60 cm
Commercial height	86 cm
Installation	Fully-integrated built-in
Kitchen panel	Not supplied
N° baskets	2
Motor	Inverter 2.0
EAN code	8017709307417

Programs

N. of programmes	10+1	**Mix**	Yes
Washing temperatures	38, 45, 50, 55, 65, 70, 75 °C	**Quiet (-2 dB)**	Yes
Soak	Yes	**Intense**	Yes
Express 27'	Yes	**Self clean**	Yes
Crystal	Yes	**Hygiene 99,9%**	Yes
Full express - 60 minutes	Yes	**Delicate**	Yes
ECO	Yes		

Options

Dry Assist+ option	Yes	**1/2 load FlexiZone option**	Yes
Delay timer option	Up to 24 hours	**Special programs option**	Yes

Baskets

Basket colour	Grey	**Largest loadable dish in upper basket**	25,0 cm
Basket components colour	Grey	**Lower Basket**	With 2 foldable racks
Handle	In plastic on upper and lower basket	**Lower basket with anti-drip inserts**	Yes

Upper Basket	With central fixed racks	**Largest loadable dish in lower basket**	35,0 cm
Glass holder	Yes	**Colour Inner Components**	Blue
Height adjustment of the upper basket	On three levels (5 cm)	**Cutlery basket**	Yes

Technical Features



Width (mm)	598 mm	**Max water hardness**	100°fH;58°dH
Depth (mm)	550 mm	**Drying system**	Natural condenser drying, with Dry Assist + automatic door opening system at the end of the cycle
Display type	LED display (3 digit)		
Product Height (mm)	858 mm	**Steam protection**	In plastic
Controls	Electronic	**Tub material**	Stainless steel
Display	Delayed start, Programme time indicator	**Filter**	Stainless steel
		Concealed heating element	Yes
Programme graphics	Symbols	**Hinges**	Self balancing, Sliding, FLEXIFIT
Salt light indicator	Light		
Rinse aid indicator	Light	**Min. and max. frontal panel weight**	2,5 - 10 kg
End of cycle indicator	Acoustic signal	**Min. and max plinth height**	50 - 215 mm
Auto switch-off	Yes	**Adjustable feet**	7 cm, from 860 to 930 mm
Washing system	Orbital	**Additional gaskets**	Yes, with stainless steel plate
Third spray arm	Single		
Water softener	With electronic setting	**Back cover**	Yes
Flood protection system	Total Acquastop	**Depth of dishwasher with open door (mm)**	1186 mm
Water supply	Single; cold/hot water max. 60°C - energysave with hot water up to 35%	**Back feet adjustable from front**	Yes
		Top cover	In plastic

Performance / Energy Label - Reg. 2019

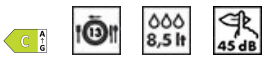

Energy Efficiency Class	C	**Programme duration**	4:40 h:min
Energy consumption [per 100 cycles, based on the eco programme]	73 kWh	**Airborne acoustical noise emissions**	45 dB(A) re 1 pW
		Airborne acoustical noise emission class	C
Rated capacity (ps)	13		
Water consumption [per cycle]	8,5 litres	**Energy efficiency Index (EEI)**	43,8

Electrical Connection

Connected power	1800 W	**Type of connection**	Single-phase
Current	10 A		

Voltage	220-240 V	**Power supply cable length**	140 cm
Frequency (Hz)	50 Hz	**Plug**	(F;E) Schuko

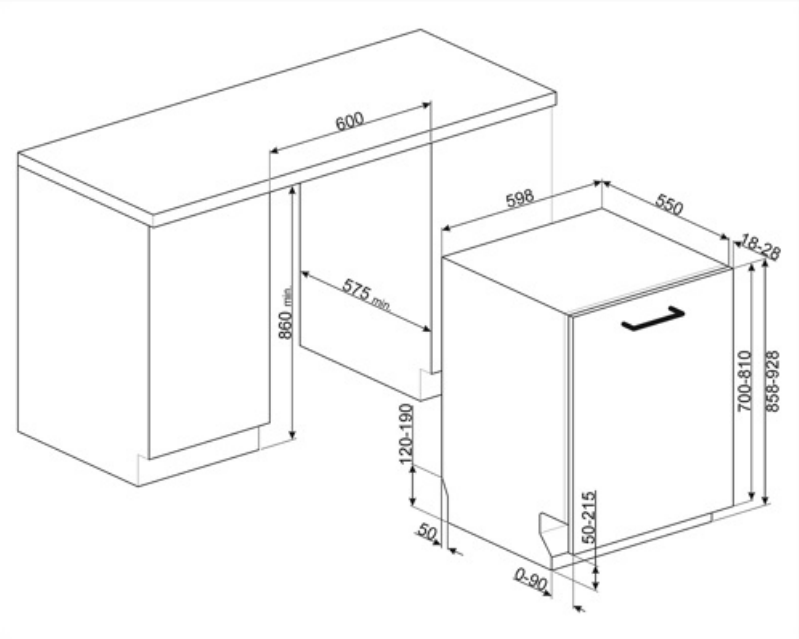

Compatible Accessories



KIT86CX-1

Door kit, stainless steel, Canali handle, fully integrated dishwasher h.86 cm Compatible with models with Flexifit and fixed fulcrum hinges.



KIT86SPRAN



KIT86SPRMW



KIT86SPRX

KITFLEXI



Kit for 60cm dishwashers with FlexiFit hinges for door panel weight >11 kg (max 15 kg 82 cm and 13,5 kg 86 cm)

KITGH

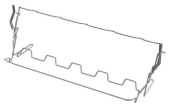

Kit glass holder. It has to be fitted on the first basket but only if there are foldable racks

KITPL60B



Toekick Kit in White colour with adjustable height and deepness. Can be installed over all the fully integrated and underbench models with variable fulcrum or flexifit hinges.

KITPL60N



Toekick Kit in Black colour with adjustable height and deepness. Can be installed over all the fully integrated and underbench models with variable fulcrum or flexifit hinges.

KITPL60X



Toekick Kit in Stainless Steel with adjustable height and deepness. Can be fitted over all the fully integrated and underbench models with variable fulcrum or flexifit hinges.

KITPLV2



Kit extension for dishwasher and washing machine: lenght mt. 2

Symbols glossary



To improve the drying of dishes without leaving stains.



86 cm high



The FlexiFit hinges allow the kitchen panel to slide over the dishwasher door, allowing a minimum kitchen plinth height of 5 cm.



Noise Level: Excellent insulation and special devices keep noise to a minimum.



Crystals: The Crystals programme is dedicated to delicate dishes such as glasses and china.



Eco: Eco, this economic wash programme uses a low amount of water and energy in order to provide the most environmentally friendly cleaning option.



Soak programme: The soak programme provides a rinse to prevent dirt from drying.



Ultraclean: The Ultraclean option performs a final rinse at a high temperature of 70°c eliminating virtually all bacteria.



Total Acquastop: In addition to the partial Acquastop protection present in all Smeg dishwashers, some models have an electronic device fitted to the water intake hose, which monitors water levels in the machine, detects leaks in the hose and switches off the water supply immediately when necessary.



Quick wash cycle for normally soiled mixed loads such as dishes and pans, even with dried-on residues. Dishes are washed and dried in 60 minutes.



SILENT: Wash cycle suitable for normally soiled dishes, even with dried-on residues. Ensures maximum noise reduction and is therefore ideal if you wish to run it during the night.



Energy efficiency class C



Delay Timer: Option to postpone the start of the desired programme by up to 24 hours in order to programme the dishwasher to run at the desired time.



FlexiZone: The ½ load flexizone allows you to wash a reduced load saving energy, water and time and there are no restrictions on where the items are placed.



Orbital wash system distributes water evenly throughout the 60cm dishwasher cavity, directing water with precision to ensure an excellent wash.



Delicate: Delicate washing program is designed for delicate dishes which are not heavily soiled.



Mix: The Mix programme is suitable for mixed crockery and everyday pots and pans, without any particular incrustation.



Express 27': The Express 27' programme is a quick wash cycle, at low temperatures, for lightly soiled dishes.



13 place settings: Number of place settings.



System WaterSave ensures the best washing results with minimal water consumption depending on the model of dishwasher.



Dishwasher cleaning cycle. The cycle should be started with the machine empty, without dishes. It is recommended to run the program every 2-3 months, using special dishwasher detergents.



Allows you to enable additional programs when selected together with any wash cycle.

The Dry Assist + option, in addition to saving energy, ensures perfect drying of the dishes by opening the door automatically at the end of the washing cycle.

The work aimed at continuous improvement has allowed the creation of the second generation of the Inverter motor 2.0, characterised by greater efficiency and durability over time, which allows very high performance and a lower energy consumption and noise level.

HYGIENE 99.9% High-temperature washing programme. The 75° rinse guarantees the removal of 99.9% of germs and bacteria.