STL333CL



Product Family	Dishwashers
Commercial width	60 cm
Commercial height	82 cm
Installation	Fully-integrated built-in
Kitchen panel	Not supplied
N° baskets	3, FlexiDuo
EAN code	8017709307011

Programs

N. of programmes	10+1	**Auto sensor 45-65**	Yes
Washing temperatures	38, 45, 50, 55, 65, 70, 75 °C	**Mix**	Yes
Soak	Yes	**Quiet (-2 dB)**	Yes
Express 27'	Yes	**Intense**	Yes
Crystal	Yes	**Self clean**	Yes
Full express - 60 minutes	Yes	**Hygiene 99,9%**	Yes
ECO	Yes		

Options

Dry Assist+ option	Yes	**Intensive wash zone option**	
Delay timer option	Up to 24 hours	**Special programs option**	Yes
1/2 load FlexiZone option	Yes		

Baskets

Basket colour	Grey	**Upper basket with EasyGlide System**	Yes
Basket components colour	Grey	**Largest loadable dish in upper basket**	19,0 cm

Handle	In plastic with stainless steel insert on upper and lower basket
Upper Basket	With 1 foldable rack
Glass holder	Yes
Height adjustment of the upper basket	On three levels (5 cm)
Lower Basket	With 2 foldable racks
Lower basket with anti-drip inserts	Yes
Largest loadable dish in lower basket	30,0 cm
Colour Inner Components	Blue

Technical Features



Width (mm)	598 mm
Depth (mm)	545 mm
Display type	LED display (3 digit)
Product Height (mm)	818 mm
Controls	Electronic
Display	Delayed start, Programme time indicator
Programme graphics	Symbols
On/off indicator	Yes
Salt light indicator	Light
Rinse aid indicator	Light
End of cycle indicator	ActiveLight
Auto switch-off	Yes
Washing system	Planetarium
Third spray arm	Single
Water softener	With electronic setting
Turbidity sensor Aquatest	Yes
Flood protection system	Total Acquastop
Water supply	Single; cold/hot water max. 60°C - energysave with hot water up to 35%
Max water hardness	100°fH;58°dH
Drying system	Natural condenser drying, with Dry Assist + automatic door opening system at the end of the cycle
Steam protection	In plastic
Tub material	Stainless steel
Filter	Stainless steel
Concealed heating element	Yes
Hinges	Self balancing, Sliding, FLEXIFIT
Min. and max. frontal panel weight	2,5 - 11 kg
Min. and max plinth height	50 - 215 mm
Adjustable feet	7 cm, from 820 to 890 mm
Additional gaskets	Yes, with stainless steel plate
Back cover	Yes
Depth of dishwasher with open door (mm)	1146 mm
Back feet adjustable from front	Yes
Top cover	In plastic

Performance / Energy Label - Reg. 2019

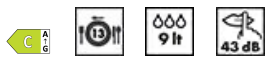

Energy Efficiency Class	C
Energy consumption [per 100 cycles, based on the eco programme]	73 kWh
Rated capacity (ps)	13
Water consumption [per cycle]	9,0 litres
Programme duration	4:25 h:min
Airborne acoustical noise emissions	43 dB(A) re 1 pW
Airborne acoustical noise emission class	B
Energy efficiency Index (EEI)	43,8

Electrical Connection

Connected power	1800 W	**Type of connection**	Single-phase
Current	10 A	**Power supply cable length**	140 cm
Voltage	220-240 V		
Frequency (Hz)	50 Hz	**Plug**	(F;E) Schuko

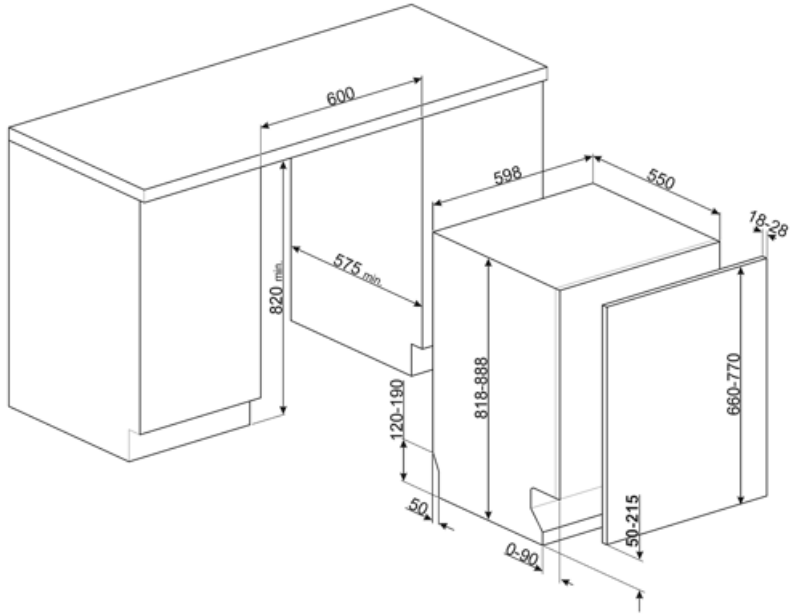

Compatible Accessories



KIT82CN



KIT82CX



KIT82SPRAN



KIT82SPRMW



KIT82SPRX

KITFLEXI



Kit for 60cm dishwashers with FlexiFit hinges for door panel weight >11 kg (max 15 kg 82 cm and 13,5 kg 86 cm)

KITGH

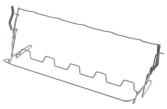

Kit glass holder. It has to be fitted on the first basket but only if there are foldable racks

KITPL60B



Toekick Kit in White colour with adjustable height and deepness. Can be installed over all the fully integrated and underbench models with variable fulcrum or flexifit hinges.

KITPL60N



Toekick Kit in Black colour with adjustable height and deepness. Can be installed over all the fully integrated and underbench models with variable fulcrum or flexifit hinges.

KITPL60X



Toekick Kit in Stainless Steel with adjustable height and deepness. Can be fitted over all the fully integrated and underbench models with variable fulcrum or flexifit hinges.

KITPLV2



Kit extension for dishwasher and washing machine: lenght mt. 2

Symbols glossary



Activelight is an led light which projects a red spot onto the floor beneath the dishwasher when the appliance is in use.



The Aquatest sensor is an electronic sensor that measures the degree of water transparency at the end of the initial soaking phase. ased on the values measured, the sensor sets the most suitable programme, thus obtaining the best washing results with the minimum amount of water.



To improve the drying of dishes without leaving stains.



Energy efficiency class C



82 cm high



Delay Timer: Option to postpone the start of the desired programme by up to 24 hours in order to programme the dishwasher to run at the desired time.



The Dry Assist + option, in addition to saving energy, ensures perfect drying of the dishes by opening the door automatically at the end of the washing cycle.



EasyGlide: Convenient EasyGlide system for easy unloading of the appliance that allows reaching maximum flexibility of load of the machine.



FlexiDuo: The FlexiDuo 3rd cutlery basket allows you to arrange cutlery or small cups, ladles, or bulky utensils however you like: it consists of two separate and moveable modules.



The FlexiFit hinges allow the kitchen panel to slide over the dishwasher door, allowing a minimum kitchen plinth height of 5 cm.



FlexiZone: The ½ load flexizone allows you to wash a reduced load saving energy, water and time and there are no restrictions on where the items are placed.





The work aimed at continuous improvement has allowed the creation of the second generation of the Inverter motor 2.0, characterised by greater efficiency and durability over time, which allows very high performance and a lower energy consumption and noise level.



Noise Level: Excellent insulation and special devices keep noise to a minimum.



The Planetarium washing system, with high rotations per minute, guarantees complete coverage of the tank, thanks to the simultaneous rotation of base and sprayers, and excellent washing results.



Auto 45°- 65°: The auto programme regulates the length of a cycle depending on the need for a pre-wash and the number of rinses required.



Crystals: The Crystals programme is dedicated to delicate dishes such as glasses and china.



Eco: Eco, this economic wash programme uses a low amount of water and energy in order to provide the most environmentally friendly cleaning option.



Mix: The Mix programme is suitable for mixed crockery and everyday pots and pans, without any particular incrustation.



Soak programme: The soak programme provides a rinse to prevent dirt from drying.



Express 27': The Express 27' programme is a quick wash cycle, at low temperatures, for lightly soiled dishes.



Ultraclean: The Ultraclean option performs a final rinse at a high temperature of 70°c eliminating virtually all bacteria.

13 place settings: Number of place settings.

Total Acquastop: In addition to the partial Acquastop protection present in all Smeg dishwashers, some models have an electronic device fitted to the water intake hose, which monitors water levels in the machine, detects leaks in the hose and switches off the water supply immediately when necessary.

System WaterSave ensures the best washing results with minimal water consumption depending on the model of dishwasher.

Quick wash cycle for normally soiled mixed loads such as dishes and pans, even with dried-on residues. Dishes are washed and dried in 60 minutes.

Dishwasher cleaning cycle. The cycle should be started with the machine empty, without dishes. It is recommended to run the program every 2-3 months, using special dishwasher detergents.

SILENT: Wash cycle suitable for normally soiled dishes, even with dried-on residues. Ensures maximum noise reduction and is therefore ideal if you wish to run it during the night.

Allows you to enable additional programs when selected together with any wash cycle.

HYGIENE 99.9% High-temperature washing programme. The 75° rinse guarantees the removal of 99.9% of germs and bacteria.