STL342CSL



Product Family	Dishwashers
Commercial width	60 cm
Commercial height	82 cm
Installation	Fully-integrated built-in
Kitchen panel	Not supplied
N° baskets	3, FlexiDuo
Motor	Single phase
EAN code	8017709324391

Programs

N. of programmes	10+1	**Green express**	Yes
Washing temperatures	38, 45, 50, 55, 65, 70, 75 °C	**Auto sensor 45-65**	Yes
Soak	Yes	**Mix**	Yes
Express 27'	Yes	**Intense**	Yes
Crystal	Yes	**Self clean**	Yes
Full express - 60 minutes	Yes	**Hygiene 99,9%**	Yes
ECO	Yes		

Options

Dry Assist+ option	Yes	**1/2 load FlexiZone option**	Yes
Delay timer option	Up to 24 hours	**Special programs option**	Yes

Baskets

Basket colour	Grey	**Largest loadable dish in upper basket**	19,0 cm
Basket components colour	Grey	**Lower Basket**	With 2 foldable racks
Handle	In plastic on upper and lower basket	**Lower basket with anti-drip inserts**	Yes

Upper Basket	With central fixed racks	**Largest loadable dish in lower basket**	30,0 cm
Height adjustment of the upper basket	On three levels (5 cm)	**Colour Inner Components**	Blue

Technical Features



Width (mm)	598 mm	**Flood protection system**	Total Acquastop
Depth (mm)	545 mm	**Water supply**	Single; cold/hot water max. 60°C - energysave with hot water up to 35%
Display type	LED display (3 digit)		
Product Height (mm)	818 mm	**Max water hardness**	100°fH;58°dH
Controls	Electronic	**Drying system**	Natural condenser drying, with Dry Assist + automatic door opening system at the end of the cycle
Display	Delayed start, Programme time indicator		
Programme graphics	Symbols	**Steam protection**	In plastic
On/off indicator	Yes	**Tub material**	Stainless steel
Salt light indicator	Light	**Filter**	Stainless steel
Rinse aid indicator	Light	**Concealed heating element**	Yes
End of cycle indicator	ActiveLight	**Hinges**	Self balancing, Sliding, FLEXIFIT
Auto switch-off	Yes	**Min. and max. frontal panel weight**	2,5 - 11 kg
Washing system	Orbital	**Min. and max plinth height**	50 - 215 mm
Third spray arm	Single	**Adjustable feet**	7 cm, from 820 to 890 mm
Water softener	With electronic setting	**Back cover**	Yes
Turbidity sensor Aquatest	Yes	**Depth of dishwasher with open door (mm)**	1146 mm
		Back feet adjustable from front	Yes
		Top cover	In plastic

Performance / Energy Label - Reg. 2019

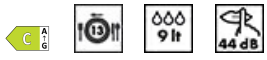

Energy Efficiency Class	C	**Programme duration**	4:00 h:min
Energy consumption [per 100 cycles, based on the eco programme]	73 kWh	**Airborne acoustical noise emissions**	44 dB(A) re 1 pW
		Airborne acoustical noise emission class	B
Rated capacity (ps)	13		
Water consumption [per cycle]	9.0 litres	**Energy efficiency Index (EEI)**	43.8

Electrical Connection

Connected power	1800 W	**Type of connection**	Single-phase

Current	10 A	**Power supply cable length**	140 cm
Voltage	220-240 V		
Frequency (Hz)	50 Hz	**Plug**	(F;E) Schuko

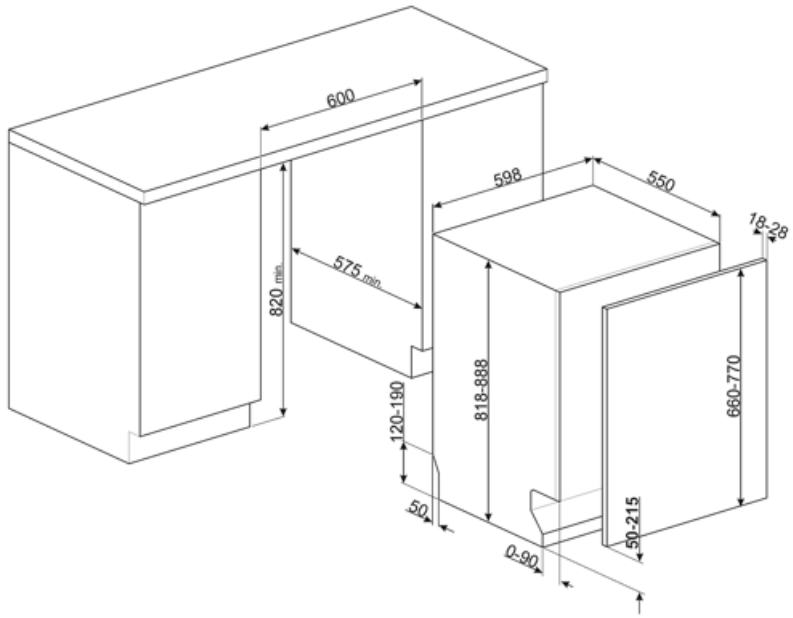

Compatible Accessories



KIT82CN



KIT82CX



KIT82SPRAN



KIT82SPRMW



KIT82SPRX

KITFLEXI



Kit for 60cm dishwashers with FlexiFit hinges for door panel weight >11 kg (max 15 kg 82 cm and 13,5 kg 86 cm)

KITGH

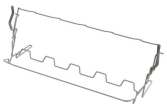

Kit glass holder. It has to be fitted on the first basket but only if there are foldable racks

KITPL60B



Toekick Kit in White colour with adjustable height and deepness. Can be installed over all the fully integrated and underbench models with variable fulcrum or flexifit hinges.

KITPL60N



Toekick Kit in Black colour with adjustable height and deepness. Can be installed over all the fully integrated and underbench models with variable fulcrum or flexifit hinges.

KITPL60X



Toekick Kit in Stainless Steel with adjustable height and deepness. Can be fitted over all the fully integrated and underbench models with variable fulcrum or flexifit hinges.

KITPLV2



Kit extension for dishwasher and washing machine: lenght mt. 2

Symbols glossary



Activelight is an led light which projects a red spot onto the floor beneath the dishwasher when the appliance is in use.



The Aquatest sensor is an electronic sensor that measures the degree of water transparency at the end of the initial soaking phase. ased on the values measured, the sensor sets the most suitable programme, thus obtaining the best washing results with the minimum amount of water.



To improve the drying of dishes without leaving stains.



82 cm high



Delay Timer: Option to postpone the start of the desired programme by up to 24 hours in order to programme the dishwasher to run at the desired time.



FlexiDuo: The FlexiDuo 3rd cutlery basket allows you to arrange cutlery or small cups, ladles, or bulky utensils however you like: it consists of two separate and moveable modules.



The FlexiFit hinges allow the kitchen panel to slide over the dishwasher door, allowing a minimum kitchen plinth height of 5 cm.



FlexiZone: The ½ load flexizone allows you to wash a reduced load saving energy, water and time and there are no restrictions on where the items are placed.



Noise Level: Excellent insulation and special devices keep noise to a minimum.



Orbital wash system distributes water evenly throughout the 60cm dishwasher cavity, directing water with precision to ensure an excellent wash.



Auto 45°- 65°: The auto programme regulates the length of a cycle depending on the need for a pre-wash and the number of rinses required.



Crystals: The Crystals programme is dedicated to delicate dishes such as glasses and china.



Eco: Eco, this economic wash programme uses a low amount of water and energy in order to provide the most environmentally friendly cleaning option.



Mix: The Mix programme is suitable for mixed crockery and everyday pots and pans, without any particular incrustation.



Soak programme: The soak programme provides a rinse to prevent dirt from drying.



Express 27': The Express 27' programme is a quick wash cycle, at low temperatures, for lightly soiled dishes.



Ultraclean: The Ultraclean option performs a final rinse at a high temperature of 70°c eliminating virtually all bacteria.



13 place settings: Number of place settings.



Total Acquastop: In addition to the partial Acquastop protection present in all Smeg dishwashers, some models have an electronic device fitted to the water intake hose, which monitors water levels in the machine, detects leaks in the hose and switches off the water supply immediately when necessary.



System WaterSave ensures the best washing results with minimal water consumption depending on the model of dishwasher.



GREEN EXPRESS Washing programme with low water and energy consumption.



Quick wash cycle for normally soiled mixed loads such as dishes and pans, even with dried-on residues. Dishes are washed and dried in 60 minutes.

Dishwasher cleaning cycle. The cycle should be started with the machine empty, without dishes. It is recommended to run the program every 2-3 months, using special dishwasher detergents.

The Dry Assist + option, in addition to saving energy, ensures perfect drying of the dishes by opening the door automatically at the end of the washing cycle.

HYGIENE 99.9% High-temperature washing programme. The 75° rinse guarantees the removal of 99.9% of germs and bacteria.

Allows you to enable additional programs when selected together with any wash cycle.

Energy efficiency class C