SUK61MX9

Cooker size	60x60 cm
N. of cavities with energy label	1
Cavity heat source	ELECTRICITY
Hob type	Gas
Type of main oven	Thermo-ventilated
Cleaning system main oven	Vapor Clean
EAN code	8017709268336
Energy efficiency class	A



Aesthetics

Design	Standard	**Type of control knobs**	Smeg Classic
Command panel finish	Stainless steel	**Controls colour**	Stainless steel
Aesthetic	Classica	**No. of controls**	6
Logo	Embossed	**Serigraphy colour**	Black
Colour	Stainless Steel	**Display name**	Electronic 5 buttons
Logo position	Facia below the oven	**Door**	With 2 horizontal strips
Finishing	Satin	**Glass type**	Stopsol
Upstand	Yes	**Handle**	Smeg Classic
Series	Concerto	**Handle Colour**	Brushed stainless steel
Hob colour	Stainless steel	**Storage compartment**	Door
Type of pan stands	Cast Iron	**Feet color**	Silver
Type of control setting hob	Control knobs	**Plinth**	Black

Programs / Functions main oven

No. of cooking functions 6

Traditional cooking functions

Static

Fan assisted

Circulaire

Eco

Large grill

Fan assisted base

Cleaning functions

 Vapor clean

Hob technical features



Total no. of cook zones 4

Front left - Gas - UR - 3.50 kW
Rear left - Gas - Semi Rapid - 1.75 kW
Rear right - Gas - Semi Rapid - 1.75 kW
Front right - Gas - AUX - 1.00 kW

Type of gas burners	Standard	**Gas safety valves**	Yes
Automatic electronic ignition	Yes	**Burner caps**	Matt black enamelled

Main Oven Technical Features



No. of lights	1	**Removable inner door**	Yes
Fan number	1	**Total no. of door glasses**	3
Net volume of the cavity	70 l	**No.of thermo-reflective door glasses**	1
Gross volume, 1st cavity	79 l	**Safety Thermostat**	Yes
Cavity material	Ever Clean enamel	**Cooling system**	Tangential
No. of shelves	5	**Usable cavity space dimensions (HxWxD)**	360X460X425 mm
Type of shelves	Metal racks	**Temperature control**	Electro-mechanical
Light type	Halogen	**Lower heating element power**	1200 W
Light Power	40 W	**Upper heating element - Power**	1000 W
Cooking time setting	Start and Stop	**Grill element**	1700 W
Light when oven door is open	Yes	**Large grill - Power**	2700 W
Door opening	Flap down	**Circular heating element - Power**	2000 W
Removable door	Yes	**Grill type**	Electric
Full glass inner door	Yes		

Options Main Oven

Timer	Yes	**Minimum Temperature**	50 °C
End of cooking acoustic alarm	Yes	**Maximum temperature**	260 °C

Accessories included for Main Oven & Hob

Moka stand	1	**40mm deep tray**	1

Rack with back and side stop	1	**Grill mesh**	1

Electrical Connection

Electrical connection rating	2800 W	**Power supply cable length**	120 cm
Current	13 A	**Frequency**	50/60 Hz
Voltage	220-240 V	**Terminal block**	3 poles
Electric cable	Installed, Single phase	**Plug**	(G) UK e Singapore

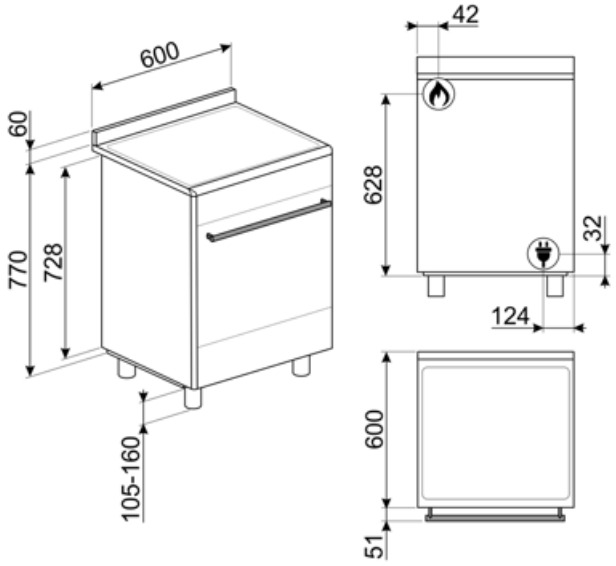

Compatible Accessories



BN620-1

Enamelled tray suitable for 45 cm and 60 cm ovens. Depth 20 mm. Perfect for a wide range of savoury and sweet baking.



BNP608T

Teflon-coated tray, 8 mm depth, to be placed on the grid



GTT

Totally extractable telescopic guides (1 level), suitable for traditional ovens. Made in stainless steel, they guarantee stability and facilitate the smooth extraction of the trays.



KITP60X9

Splashback, stainless steel, suitable for 60X60cm Concerto cookers with pyro and MF oven

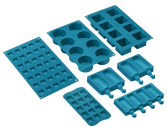

SMOLD

Set of 7 silicone moulds for ice creams, ice lollies, pralines, ice cubes or to portion food. Usable from -60°C to +230°C



BN640

Enamelled tray suitable for 45cm and 60cm ovens. Depth 540 mm. Perfect for cooking and roasting meat and fish in sauces. Also ideal for experimenting with lighter and crunchy side dishes



GTP

Partially extractable telescopic guides (1 level), suitable for traditional ovens. Made in stainless steel, they guarantee stability and facilitate the smooth extraction of the trays.



KITH95

Height extension feet (950mm), stainless steel, suitable for Concerto cookers (911-966mm)



SFLK1

Child lock

Symbols glossary



Heavy duty cast iron pan stands: for maximum stability and strength.



Installation in column: Installation in column.



Triple glazed doors: Number of glazed doors.



Fan assisted base: the mix of fan and lower heating element alone allows to finish cooking foods already cooked on the surface but not internally more quickly. This system is recommended to finish cooking foods that are already well cooked on the surface, but not internally, which therefore require a moderate higher heat. Ideal for any type of food.



Static: Traditional cooking suitable for the preparation of one dish at a time. The fan is not active and the heat comes from below and from above at the same time. Static cooking is slower and more delicate, ideal in order to get well cooked and dry dishes even inside. Ideal for cooking all types of roasts, fatty meats, bread, filled cakes.



ECO: low energy consumption cooking: this function is particularly suitable for cooking on a single shelf with low energy consumption. It is recommended for all types of food except those that can generate a lot of moisture (for example vegetables). To achieve maximum energy savings and reduce time, it is recommended to put the food in the oven without preheating the cooking compartment.



All glass inner door: All glass inner door, a single flat surface which is simple to keep clean.



Energy efficiency class A



Air cooling system: to ensure a safe surface temperatures.



Ever Clean Enamel: Ever Clean enamel is applied electrostatically, corner to corner and edge to edge to prevent cracking or cracks over time. It is a particular pyrolytic enamel, resistant to acids which, in addition to being pleasantly bright, promotes greater cleaning of the oven walls, thanks to its lower porosity. It is baked at over 850 °C and slowly polymerized at a scientifically determined rate to ensure uniform depth and strength. Ever Clean enamel creates an impeccable finish both on the inside of the oven and on the trays, making the surfaces of the oven incredibly easy to maintain over time as it reduces the adhesion of fat during cooking.



Fan assisted: Intense and homogeneous traditional cooking, also suitable for complex recipes. The fan is active and the heat comes from below and from above at the same time. Ventilated cooking ensures a faster and more homogeneous result, leaving fragrant foods outside and moister inside. Ideal for baked pasta, biscuits, roasts and cobblers.



Circulaire: it is the perfect function for cooking all types of dishes in a more delicate way. The heat comes from the back of the oven and is distributed quickly and evenly. The fan is active. It is also ideal for cooking on multiple levels without mixing smells and flavors.



Grill: Very intense heat coming only from above from a double heating element. The fan is not active. Provides excellent grilling and gratinating results. Used at the end of cooking, it gives a uniform browning to dishes.



The inner door glass: can be removed with a few quick movements for cleaning.

Side lights: Two opposing side lights increase visibility inside the oven.

Automatic opening: some models have Automatic opening door when the cycle is finished which is a perfect solution for handle-less kitchen units as no handle is needed. For safety reasons, the door locks automatically when the machine is in use to avoid it being opened inadvertently.

The oven cavity has 5 different cooking levels.

Ultra rapid burners: Powerful ultra rapid burners offer up to 5kw of power.

Vapor Clean: a simple cleaning function using steam to loosen deposits in the oven cavity.

The capacity indicates the amount of usable space in the oven cavity in litres.

Knobs control