SWT264M

Tipo	Máquinas de lavar louça com sistema de água limpa
Louça	Louça; Copos; Talheres
Bomba de lavagem	Standard
Ligação energética	230 V 3~ / 30 A / 7,0 kW / 50 Hz
Dimensões do produto (LxPxA)	600x600x850 mm



Mercado

Indústrias	Estabelecimentos de Cuidados

Design

Cor dos LEDs	Laranja

Especificações técnicas

Fluxo da bomba de lavagem	400 L / min
Temperatura pré-definida de ligação da água	5°C
Temperatura máxima de entrada:	60°C
Dureza máxima da água	40°f - 22°dH
Profundidade com porta aberta	1200 mm
Altura máxima do cesto inferior	290 mm
Diâmetro máximo de prato para o cesto superior	240 mm

Programas

Programas	7 automatic programs
Tabela de programas	Thermodisinfection dishwasher
Configuração de programa preferida	Sim
Função repetição	Sim
Regeneration and complete drain cycle	Sim
Temperatura de enxaguamento (máx.)	93 °C
Maximum wash cycle duration with thermal disinfection	34 min

Grade of lethality of thermal disinfection (AI)	AI = 6.000 (93° C / 5') - AI = 12.000 (93° C / 10')
Maximum wash cycle duration	8 min
Maximum place settings capacity	12
Maximum place settings capacity/hour	90

Ligação elétrica

Potência do elemento de aquecimento do tanque	6400 W	**Ligação pré-definida**	6800 W
Potência da bomba de lavagem	400 W	**Potential equalisation**	Yes

Interface

Display	4 digit	**Alerta de falta de detergente**	Sim
Luz indicadora On/Off	Sim	**Indicador da fase do programa**	Sim
Luz indicadora de falta de sal	Sim	**Indicador de fim do programa**	Sim
Alerta de falta de abrilhantador	Sim	**Diagnóstico manual**	Sim

ESPECIFICAÇÕES TÉCNICAS

Cuba	Profundo	**Guias dos cestos**	Embutidas
Material da cuba	Aço inox AISI 304	**Filtro**	3-stage filter system
Painel traseiro	Porta galvanizada	**Ruído**	LpA<70 dB(A)
Sistema de lavagem superior	One wash and one single rinse spray arms, stainless steel	**Porta de abertura automática**	Sim
		Pés ajustáveis	Sim
Sistema de lavagem inferior	Um braço de lavagem e um braço de enxaguamento dividido, em aço inoxidável.	**Altura max. de drenagem**	1000 mm
		Power cable length	150 cm
Balanced door	Sim		
Filtro da cuba	Aço inox		
Junta da porta	Em 3 lados		

Acessórios incluídos

Mangueira de abastecimento de água	Sim - 2m	**Mangueira de drenagem**	Sim - 2m

Equipamentos

Drain pump	Sim	**Tanque de Ruptura**	Sim
		Tranca da porta	Sim

Dispensadores de detergente e abrilhantador na porta	Sim
Amaciador automático incorporado	Sim

Dados de logística

Código EAN	8017709284077	**Peso líquido (kg)**	76,000 kg
Dimensões do produto embalado (LxPxA)	660x790x1050 mm	**Peso bruto (kg)**	84,000 kg

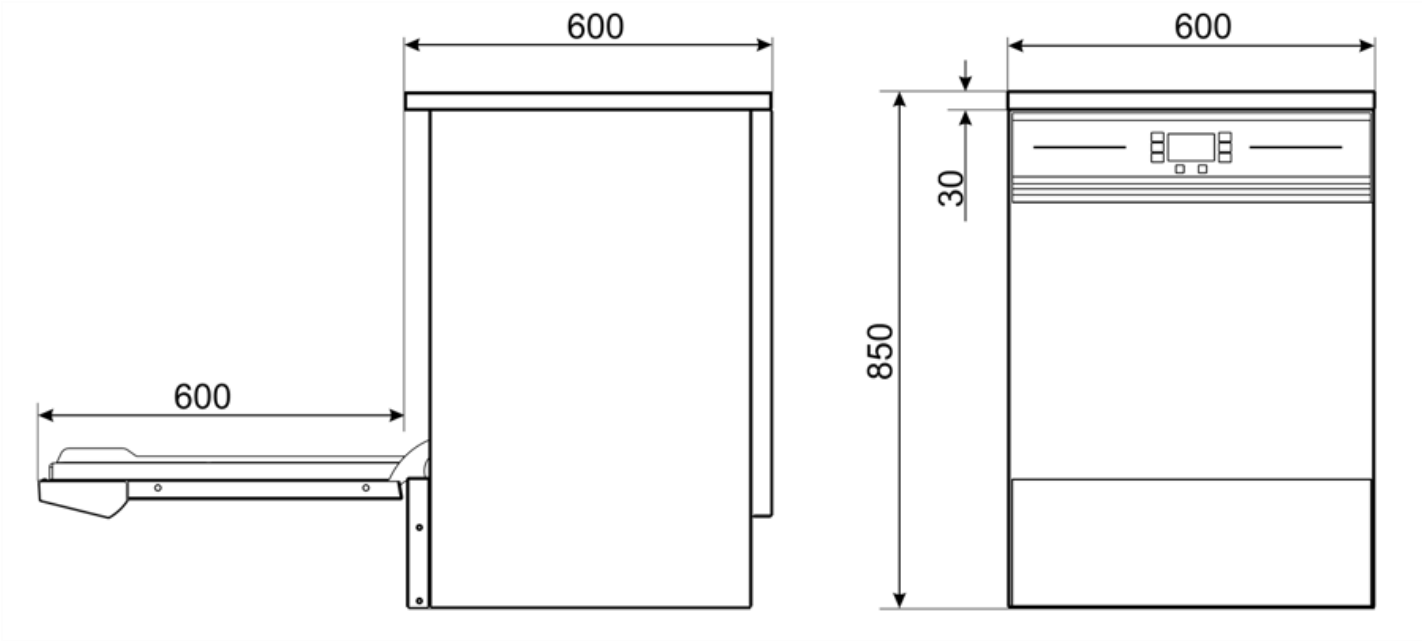

Acessórios Compatíveis

AS4060

Kit Aquastop

B6040L



Stainless steel closed underframe with push opening, dim. (WxDxH) 600x530x430 mm

KSL260



Probe level kit for detergent and rinse aid H320mm

KSLR260



Adaptor for PB50D01 and PB50G02 basket

KSP



Stainless steel kit steam protector

LB16SWT

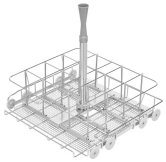

Stainless steel basket for 16 bottles

PB50D01

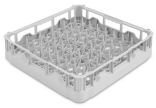

Polypropylene basket for 18 plates Ø250 mm max, dim.(WxDxH) 500x500x105 mm

PHOOS02



6 compartment polypropylene basket for cutlery

STNBIN



Stainless steel front closing plinth

T6040



Stainless steel frame stand, dim. 600x530x400 mm

TOP60I



Copper cover kit when removing buiilt-in panel

Symbols glossary



Bloqueio de comandos: opção que permite bloquear os comandos. Muito útil para proteger as crianças.

Benefit (TT)

Door lock

Maximum safety during the thermodisinfection cycle

The door lock system prevents opening during the thermodisinfection cycle, ensuring the process runs smoothly and safely, avoiding any accidental interruptions that could compromise the effectiveness of the treatment and preventing the risk of contamination.

Repeat cycle

The Repeat function reduces consumption by reusing the water from the final rinse

The Repeat function allows the clean water from the final rinse to be reused for the next wash cycle. This feature not only reduces water consumption but also enhances process efficiency, shortening wash times without compromising hygiene or cleaning quality.

Integrated softener

Effective water treatment for consistently sparkling glasses

The integrated continuous regeneration water softener ensures effective water treatment, enhancing washing performance and preserving the machine's operational lifespan. The resin regeneration process takes place during the wash cycle without interruptions, providing constant control over water hardness. This system prevents limescale buildup, maximises detergent efficiency, and guarantees spotless results on glassware and dishes.

Chemical dispenser on the door

Optimised space and simplified maintenance

The detergent and rinse aid dispenser positioned on the door optimises the internal space of the machine, reducing clutter and keeping the work area tidy. Additionally, it provides easy access for refills and maintenance without the need to open the main body of the machine.

SWT

Designed to ensure the highest standards of hygiene and cleanliness

These appliances are designed to ensure high standards of hygiene and cleanliness. The thermodisinfection programmes with a 93°C rinse achieve A0 levels of up to 12000, which cannot be reached by traditional professional dishwashers.

Moulded tank

Superior washing performance and enhanced cleaning convenience with molded tub bottoms and basket guides

The tank, featuring rounded corners and integrated basket guides, is designed to prevent dirt build-up and make cleaning the machine quick and easy. The moulded base also helps direct any residue towards the filter, ensuring high levels of hygiene and consistently thorough cleaning.