SWT264X

Type	Washer-disinfectors
Crockery	Crockery; Glasses; Cutlery
Wash pump	Standard
Power connection	400 V 3N~ / 12 A / 7 kW / 50 Hz
Product dimensions (WxDxH)	600x600x850 mm



Target

Industries	Care facilities

Aesthetics

Led color	Orange

Technical Features

Wash pump flow	400 L / min
Min. water connection temperature	5°C
Max. inlet temperature	60°C
Max water hardness	40°f - 22°dH
Detergent load	1,5 l/h
Rinse load	0,4 l/h
Depth with open door	1200 mm
Max dish height lower basket	290 mm
Max dish diameter upper basket	240 mm

Programs

Programs	7 automatic programs
Program table	Thermodisinfection dishwasher with drying
Preferred program setting	Yes
Repeat Function	Yes
Regeneration and complete drain cycle	Yes

Rinse temperature (max)	93 °C
Maximum wash cycle duration with thermal disinfection	34 min
Grade of lethality of thermal disinfection (A0)	A0 = 6.000 (93° C / 5') - A0 = 12.000 (93° C / 10')
Maximum wash cycle duration	8 min
Maximum place settings capacity	12
Maximum place settings capacity/hour	90

Electrical Connection

Tank heating element power	6400 W	**Optional electrical connection**	230 V 3~ / 19 A / 7 kW / 50 Hz; 220 V~ / 12 A / 2,8 kW / 50 Hz; 230 V~ / 16 A / 3,5 kW / 50 Hz
Wash pump power	400 W	**Potential equalisation**	Yes
Default connection	6800 W	**Plug**	Not present

Interface

Display	4 digit	**Detergent missing alert**	Yes
On/Off button	Yes	**Cycle progress alert**	Yes
Salt alert	Yes	**End-cycle alert**	Yes
Rinse aid missing alert	Yes	**Manual diagnostic**	Yes

Construction

Tank	Deep drawn	**Rack guides**	Embossed
Tank material	Stainless steel AISI 304	**Filter**	3-stage filter system
Back panel	Galvanized	**Condensatore**	Yes
Upper wash system	One wash and one single rinse spray arms, stainless steel	**Noise**	LpA<70 dB(A)
		Adjustable feet	Yes
		Drain max. height	1000 mm
Lower wash system	One wash and one single rinse spray arms, stainless steel	**Power cable length**	150 cm
Balanced door	Yes		
Tank filter	Stainless steel		
Door gasket	On 3 sides		

Accessories included

Water supply hose	Yes - 2 m	**Drain hose**	Yes - 2m

Equipments

Drain pump	Yes	**Conductivity sensor**	Si
		Break tank	Yes

Detergent and rinse dispender on the door	Yes	**Door lock**	Yes
Automatic built softener	Yes	**Detergent (red) hose length**	2,2 m
Forced drying system	Yes	**Rinse aid (blue) hose length**	2,2 m
Wash pump soft start system	Yes		

Logistic Information

EAN code	8017709282073	**Net weight**	76.000 kg
Packed product dimensions (WxDxH)	660x790x1050 mm	**Gross weight**	84.000 kg

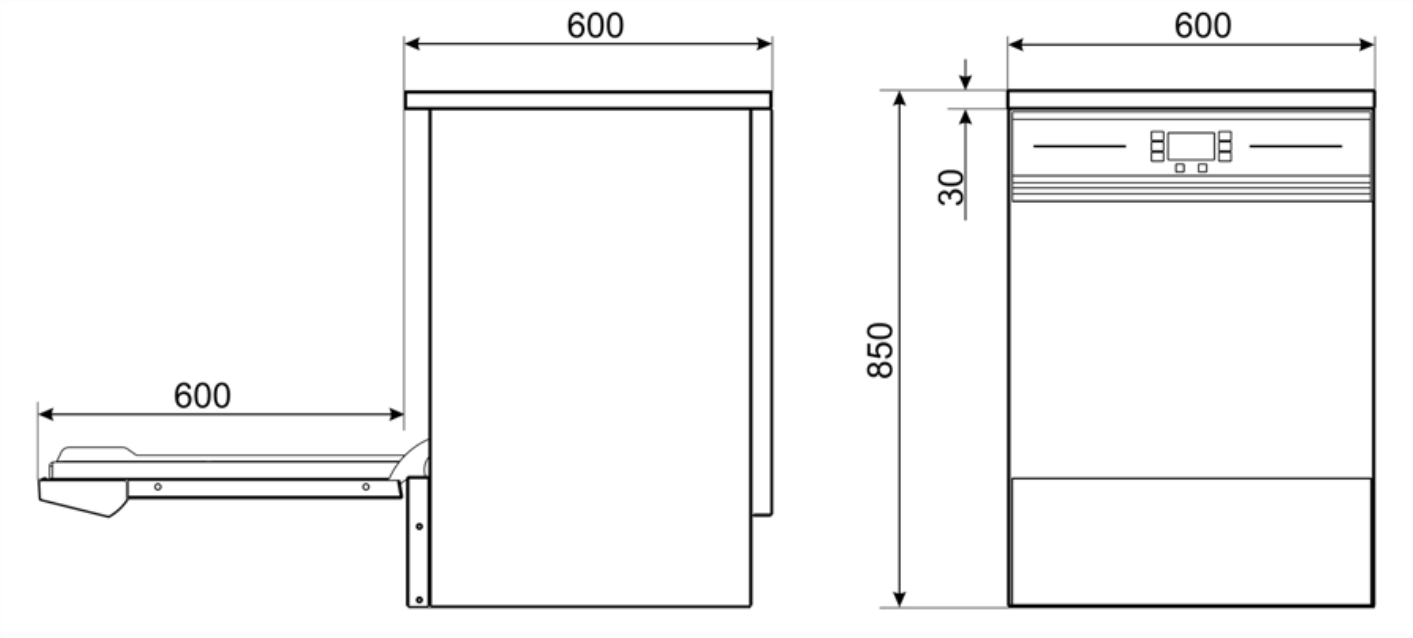

Compatible Accessories

AS4060

Kit Aquastop



B6040L

Stainless steel closed underframe with push opening, dim. (WxDxH) 600x530x430 mm

KSL260

Probe level kit for detergent and rinse aid H320mm



KSLR260

Adaptor for PB50D01 and PB50G02 basket





KSP

Stainless steel kit steam protector

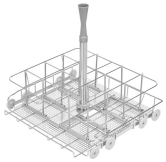

LB16SWT

Stainless steel basket for 16 bottles

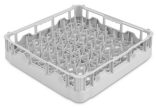

PB50D01

Polypropylene basket for 18 plates Ø250 mm max, dim.(WxDxH) 500x500x105 mm



PHOOS02

6 compartment polypropylene basket for cutlery



STNBIN

Stainless steel front closing plinth



T6040

Stainless steel frame stand, dim. 600x530x400 mm



TOP60I

Copper cover kit when removing buiilt-in panel

Symbols glossary



Child lock: some models are fitted with a device to lock the programme/cycle so it cannot be accidentally changed.

Benefit (TT)

Door lock

Maximum safety during the thermodisinfection cycle

The door lock system prevents opening during the thermodisinfection cycle, ensuring the process runs smoothly and safely, avoiding any accidental interruptions that could compromise the effectiveness of the treatment and preventing the risk of contamination.

Repeat cycle

The Repeat function reduces consumption by reusing the water from the final rinse

The Repeat function allows the clean water from the final rinse to be reused for the next wash cycle. This feature not only reduces water consumption but also enhances process efficiency, shortening wash times without compromising hygiene or cleaning quality.

Drying system

Dishes always dry, ready to be used without any waiting

The integrated forced drying system ensures, at the end of the cycle, perfectly dry dishes ready for use, eliminating any trace of moisture and guaranteeing optimal results in a short time.

Integrated softener

Effective water treatment for consistently sparkling glasses

The integrated continuous regeneration water softener ensures effective water treatment, enhancing washing performance and preserving the machine's operational lifespan. The resin regeneration process takes place during the wash cycle without interruptions, providing constant control over water hardness. This system prevents limescale buildup, maximises detergent efficiency, and guarantees spotless results on glassware and dishes.

Soft-start system

Effective management of the washing pump to protect your glassware

The Soft-Start function initiates the wash cycle gently and gradually, progressively increasing the water pressure. This system has been designed to provide optimal protection for the most fragile items, such as crystal glasses, significantly reducing the risk of chipping or damage. At the same time, it ensures excellent cleaning performance, combining efficiency and safety in every wash cycle.

Chemical dispenser on the door

Optimised space and simplified maintenance

The detergent and rinse aid dispenser positioned on the door optimises the internal space of the machine, reducing clutter and keeping the work area tidy. Additionally, it provides easy access for refills and maintenance without the need to open the main body of the machine.

SWT

Designed to ensure the highest standards of hygiene and cleanliness

These appliances are designed to ensure high standards of hygiene and cleanliness. The thermodisinfection programmes with a 93°C rinse achieve A0 levels of up to 12000, which cannot be reached by traditional professional dishwashers.

Moulded tank

Superior washing performance and enhanced cleaning convenience with molded tub bottoms and basket guides

The tank, featuring rounded corners and integrated basket guides, is designed to prevent dirt build-up and make cleaning the machine quick and easy. The moulded base also helps direct any residue towards the filter, ensuring high levels of hygiene and consistently thorough cleaning.