SWT264XD

Tipo	Máquinas de lavar louça com sistema de água limpa
Louça	Louça; Copos; Talheres
Bomba de lavagem	Standard
Ligação energética	400 V 3N~ / 12 A / 7 kW / 50 Hz
Dimensões do produto (LxPxA)	600x600x850 mm



Mercado

Indústrias	Estabelecimentos de Cuidados

Design

Cor dos LEDs	Laranja

Especificações técnicas

Fluxo da bomba de lavagem	400 L / min
Temperatura pré-definida de ligação da água	5°C
Temperatura máxima de entrada:	60°C
Dureza máxima da água	40°f - 22°dH
Carga de detergente	1,5 l/h
Carga de enxaguamento	0,4 l/h
Profundidade com porta aberta	1200 mm
Altura máxima do cesto inferior	290 mm
Diâmetro máximo de prato para o cesto superior	240 mm

Programas

Programas	7 automatic programs
Tabela de programas	Thermodisinfection dishwasher with drying
Configuração de programa preferida	Sim
Função repetição	Sim
Regeneration and complete drain cycle	Sim

Temperatura de enxaguamento (máx.)	93 °C
Maximum wash cycle duration with thermal disinfection	34 min
Grade of lethality of thermal disinfection (A0)	A0 = 6.000 (93° C / 5') - A0 = 12.000 (93° C / 10')
Maximum wash cycle duration	8 min
Maximum place settings capacity	12
Maximum place settings capacity/hour	90

Ligação elétrica

Potência do elemento de aquecimento do tanque	6400 W
Potência da bomba de lavagem	400 W
Ligação pré-definida	6800 W
Ligação eléctrica opcional	230 V 3~ / 19 A / 7 kW / 50 Hz; 220 V~ / 12 A / 2,8 kW / 50 Hz; 230 V~ / 16 A / 3,5 kW / 50 Hz
Potential equalisation	Yes
Ficha elétrica	Não

Interface

Display	4 digit
Luz indicadora On/Off	Sim
Luz indicadora de falta de sal	Sim
Alerta de falta de abrilhantador	Sim
Alerta de falta de detergente	Sim
Indicador da fase do programa	Sim
Indicador de fim do programa	Sim
Diagnóstico manual	Sim

ESPECIFICAÇÕES TÉCNICAS

Cuba	Profundo
Material da cuba	Aço inox AISI 304
Painel traseiro	Porta galvanizada
Sistema de lavagem superior	One wash and one single rinse spray arms, stainless steel
Sistema de lavagem inferior	Um braço de lavagem e um braço de enxaguamento dividido, em aço inoxidável.
Balanced door	Sim
Filtro da cuba	Aço inox
Junta da porta	Em 3 lados
Guias dos cestos	Embutidas
Filtro	3-stage filter system
Condensador	Sim
Ruído	LpA<70 dB(A)
Pés ajustáveis	Sim
Altura max. de drenagem	1000 mm
Power cable length	150 cm

Acessórios incluídos

Mangueira de abastecimento de água	Sim - 2m
Mangueira de drenagem	Sim - 2m

Equipamentos

Drain pump	Sim	**Sistema de arranque suave da bomba de lavagem**	Sim
Dispensador peristáltico de detergente	Controlo eletrónico	**Sensor de condutividade**	Sim
Dispensador peristáltico de abrilhantador	Controlo eletrónico	**Tanque de Ruptura**	Sim
Sonda de nível químico	Yes, with optional kit KSL260	**Tranca da porta**	Sim
Amaciador automático incorporado	Sim	**Comprimento da mangueira de detergente (vermelha)**	2,2 m
Sistema de secagem forçada	Sim	**Comprimento da mangueira de enxaguamento (azul)**	2,2 m

Dados de logística

Código EAN	8017709269685	**Peso líquido (kg)**	74,000 kg
Dimensões do produto embalado (LxPxA)	660x790x1050 mm	**Peso bruto (kg)**	86,000 kg

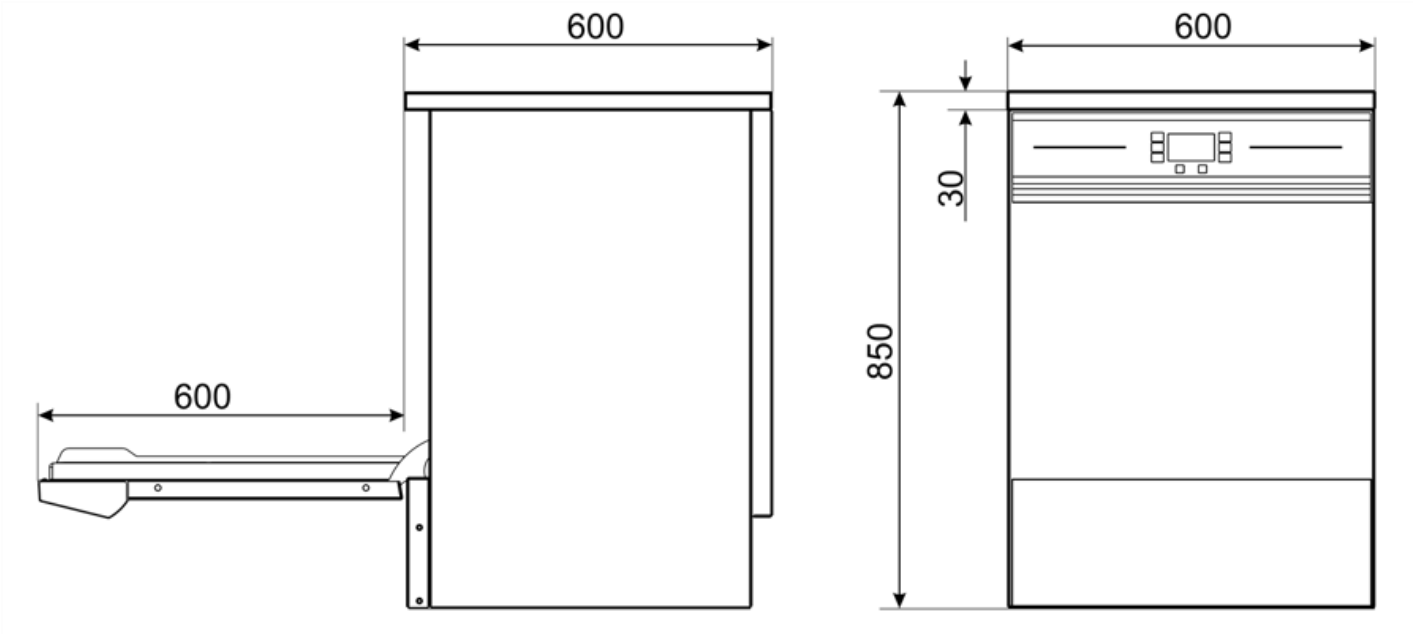

Acessórios Compatíveis

AS4060

Kit Aquastop

B6040L



Stainless steel closed underframe with push opening, dim. (WxDxH) 600x530x430 mm

KSL260



Probe level kit for detergent and rinse aid H320mm

KSLR260



Adaptor for PB50D01 and PB50G02 basket

KSP



Stainless steel kit steam protector

LB16SWT

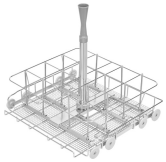

Stainless steel basket for 16 bottles

PB50D01

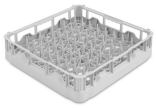

Polypropylene basket for 18 plates Ø250 mm max, dim.(WxDxH) 500x500x105 mm

PHOOS02



6 compartment polypropylene basket for cutlery

STNBIN



Stainless steel front closing plinth

T6040



Stainless steel frame stand, dim. 600x530x400 mm

TOP60I



Copper cover kit when removing buiilt-in panel

Symbols glossary



Bloqueio de comandos: opção que permite bloquear os comandos. Muito útil para proteger as crianças.

Benefit (TT)

Door lock

Maximum safety during the thermodisinfection cycle

The door lock system prevents opening during the thermodisinfection cycle, ensuring the process runs smoothly and safely, avoiding any accidental interruptions that could compromise the effectiveness of the treatment and preventing the risk of contamination.

Repeat cycle

The Repeat function reduces consumption by reusing the water from the final rinse

The Repeat function allows the clean water from the final rinse to be reused for the next wash cycle. This feature not only reduces water consumption but also enhances process efficiency, shortening wash times without compromising hygiene or cleaning quality.

Drying system

Dishes always dry, ready to be used without any waiting

The integrated forced drying system ensures, at the end of the cycle, perfectly dry dishes ready for use, eliminating any trace of moisture and guaranteeing optimal results in a short time.

Integrated softener

Effective water treatment for consistently sparkling glasses

The integrated continuous regeneration water softener ensures effective water treatment, enhancing washing performance and preserving the machine's operational lifespan. The resin regeneration process takes place during the wash cycle without interruptions, providing constant control over water hardness. This system prevents limescale buildup, maximises detergent efficiency, and guarantees spotless results on glassware and dishes.

Soft-start system

Effective management of the washing pump to protect your glassware

The Soft-Start function initiates the wash cycle gently and gradually, progressively increasing the water pressure. This system has been designed to provide optimal protection for the most fragile items, such as crystal glasses, significantly reducing the risk of chipping or damage. At the same time, it ensures excellent cleaning performance, combining efficiency and safety in every wash cycle.

SWT

Designed to ensure the highest standards of hygiene and cleanliness

These appliances are designed to ensure high standards of hygiene and cleanliness. The thermodisinfection programmes with a 93°C rinse achieve A0 levels of up to 12000, which cannot be reached by traditional professional dishwashers.

Moulded tank

Superior washing performance and enhanced cleaning convenience with molded tub bottoms and basket guides

The tank, featuring rounded corners and integrated basket guides, is designed to prevent dirt build-up and make cleaning the machine quick and easy. The moulded base also helps direct any residue towards the filter, ensuring high levels of hygiene and consistently thorough cleaning.